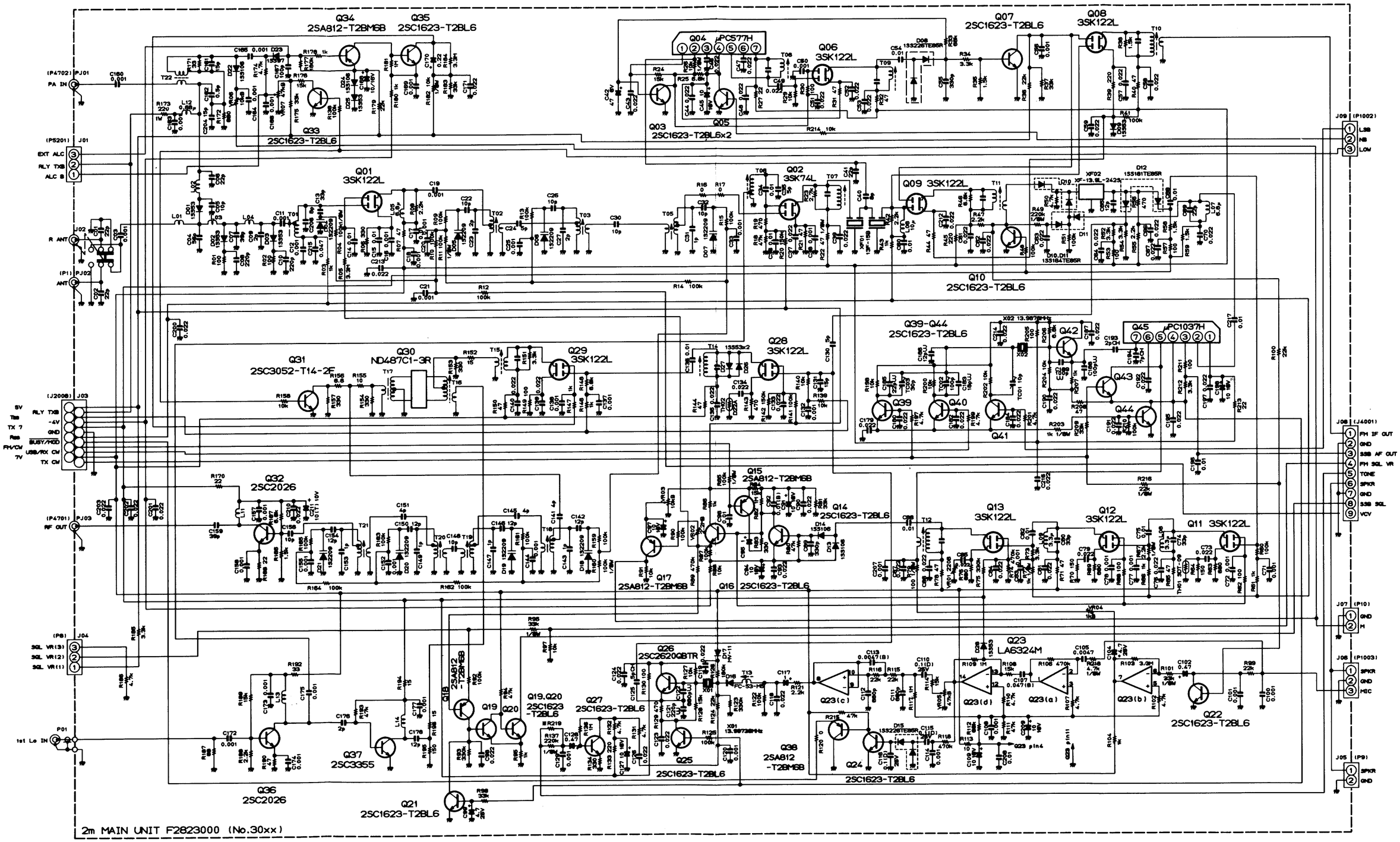

RESISTOR VALUES ARE IN Ω, 1/10W;
CAPACITOR VALUES ARE IN μF, 50wv;
INDUCTOR VALUES ARE IN HENRIES UNLESS OTHERWISE NOTED.
(T)CAPACITOR ARE TANTALUM, 16wv.

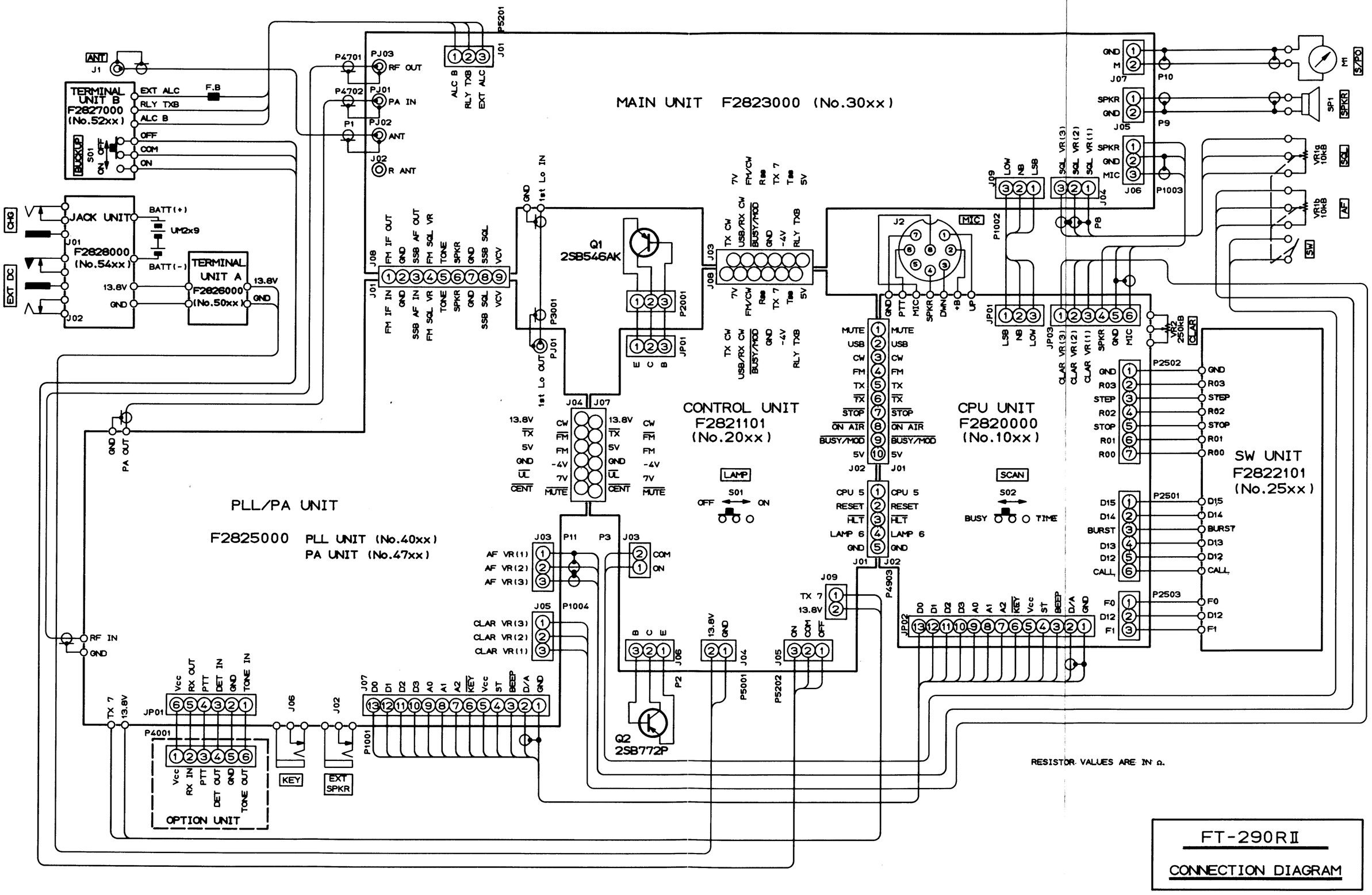
MAIN UNIT F2823000 (No.30xx)
TERMINAL UNIT B F2827000 (No.52xx)
JACK UNIT F2828000 (No.54xx)
TERMINAL UNIT A F2826000 (No.50xx)
PLL/PA UNIT
F2825000 PLL UNIT (No.40xx)
PA UNIT (No.47xx)
CONTROL UNIT F2821101 (No.20xx)
CPU UNIT F2820000 (No.10xx)
SW UNIT F2822101 (No.25xx)
OPTION UNIT
Q1 2SB546AK
Q2 2SB772P
RESISTOR VALUES ARE IN Ω.
FT-290RII
CONNECTION DIAGRAM

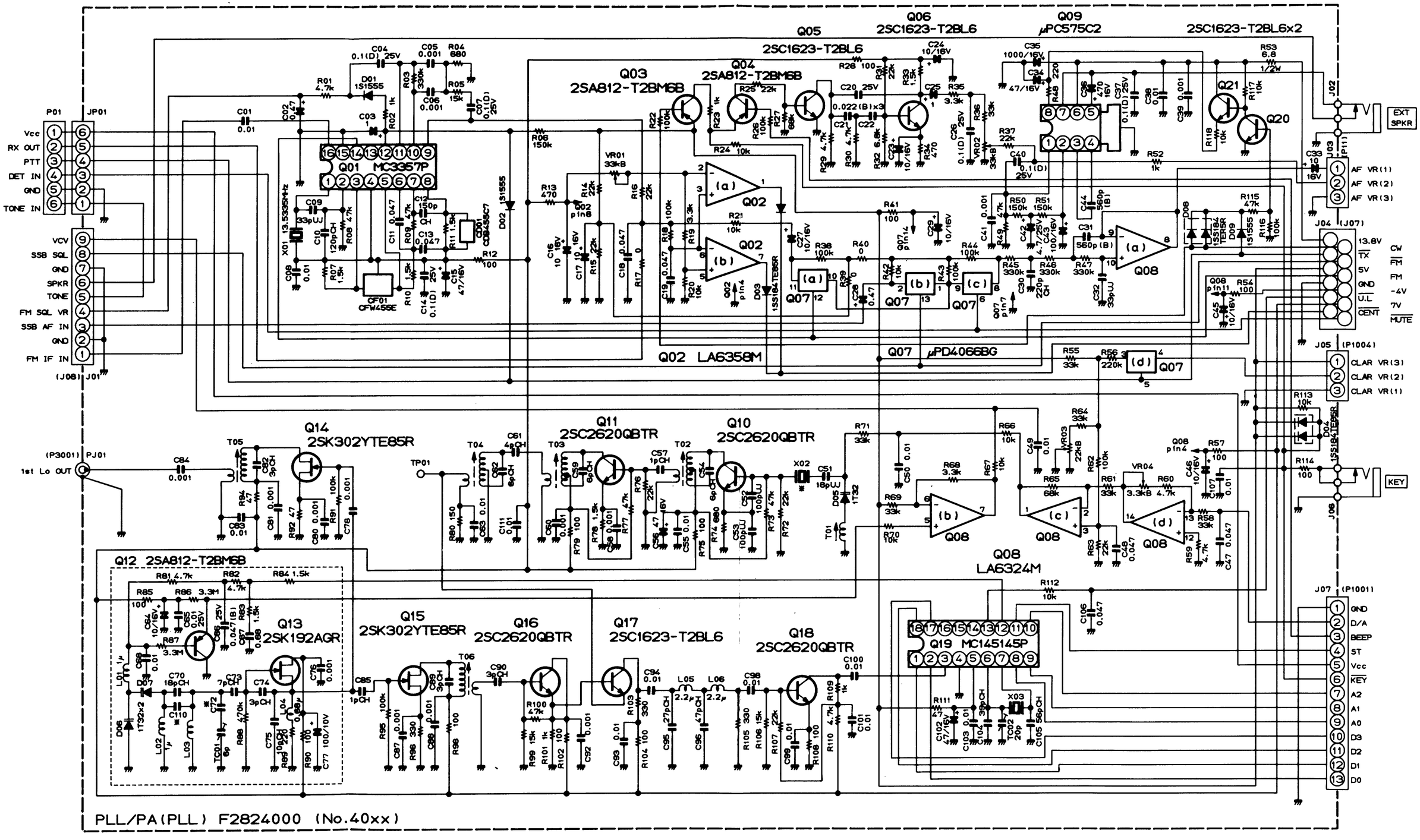

RESISTOR VALUES ARE IN Ω 1/10W:
CAPACITOR VALUES ARE IN μF. 50wv:
INDUCTOR VALUES ARE IN HENRIES. UNLESS OTHERWISE NOTED.

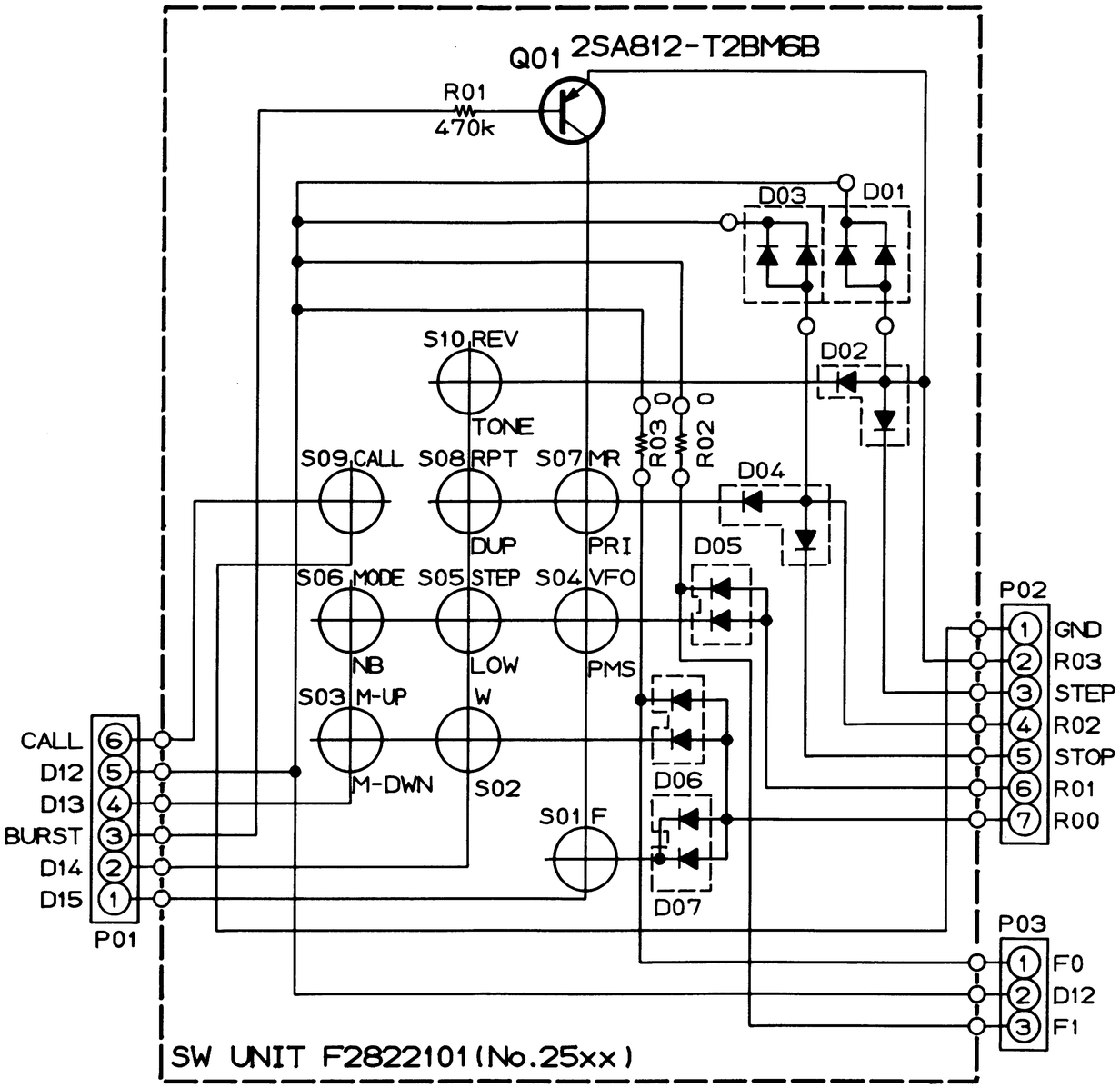

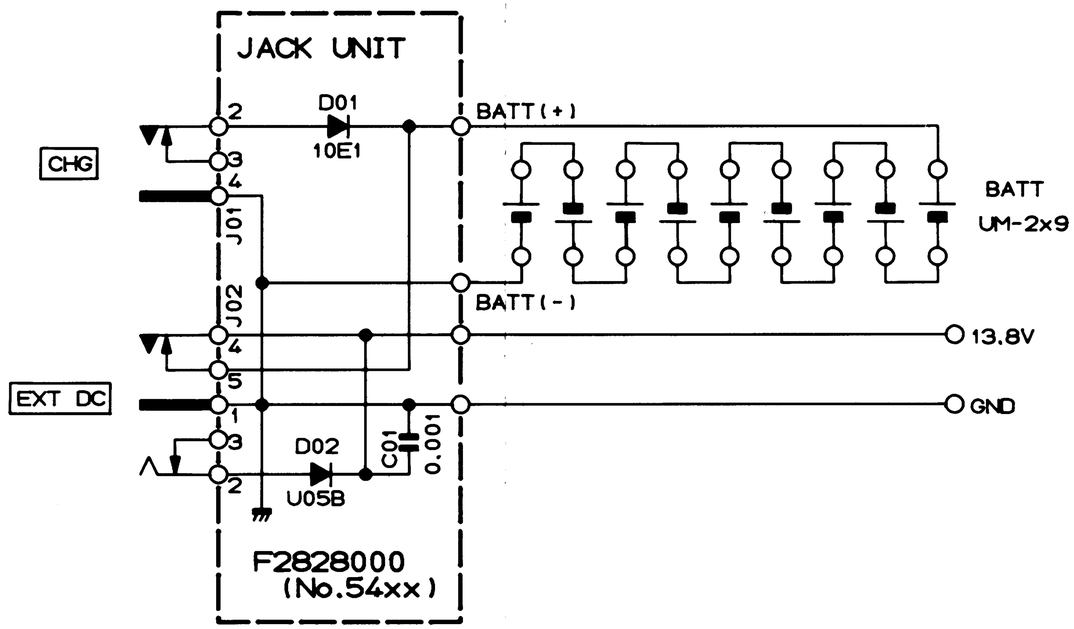

RESISTOR VALUES ARE IN Ω.1/10w:
DIODES ARE TYPE 1SS181:
UNLESS OTHERWISE NOTED.

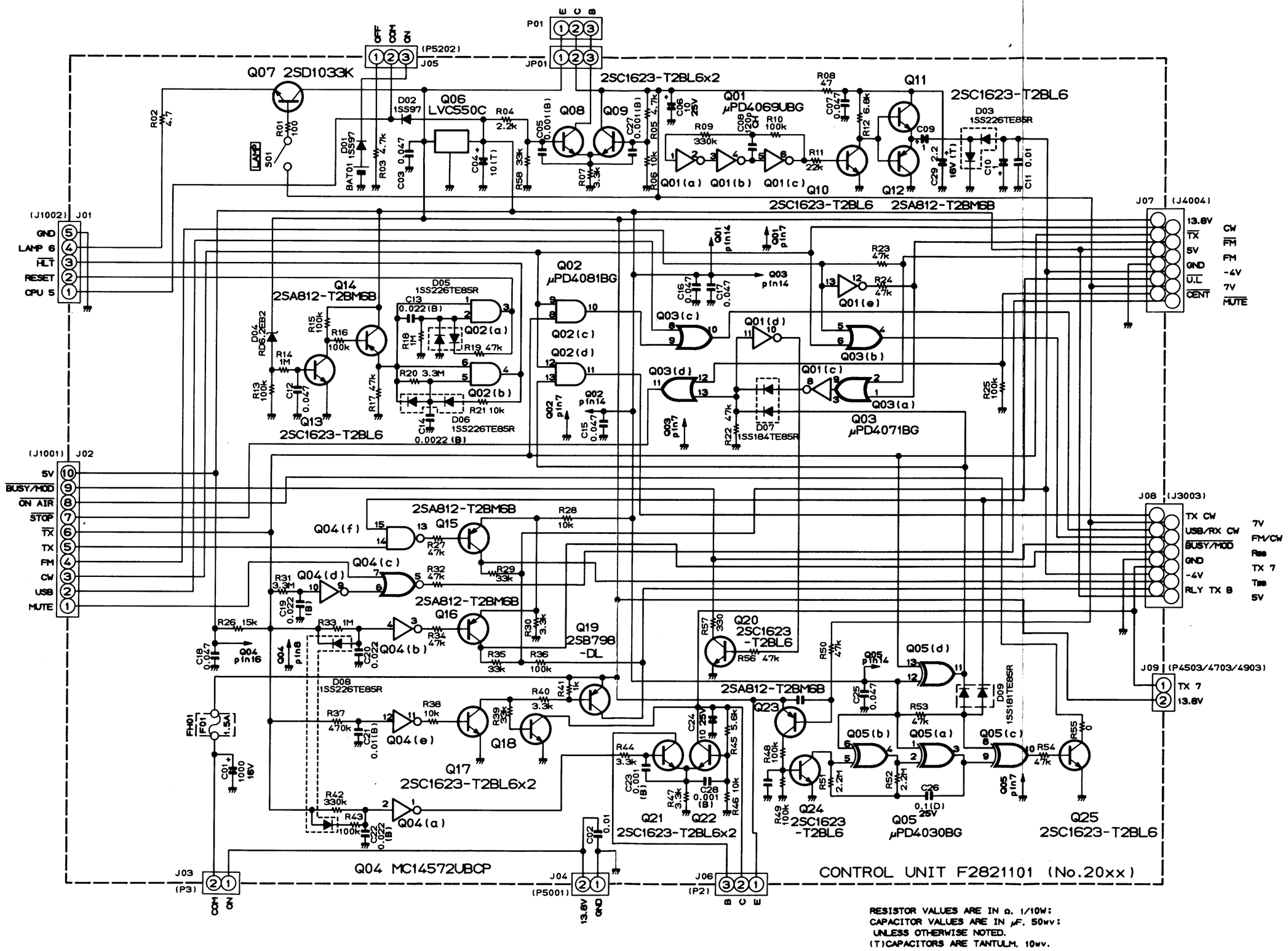
CONTROL UNIT F2821101 (No.20xx)
Q07 2SD1033K
Q06 LVC550C
Q08
Q09
2SC1623-T2BL6x2
Q01 μPD4069UBG
Q11
2SC1623-T2BL6
Q10
Q12
2SC1623-T2BL6
2SA812-T2BM6B
Q14 2SA812-T2BM6B
Q13 2SC1623-T2BL6
Q02 μPD4081BG
Q03 μPD4071BG
Q15 2SA812-T2BM6B
Q16 2SA812-T2BM6B
Q19 2SB798-DL
Q20 2SC1623-T2BL6
Q17 2SC1623-T2BL6x2
Q18
Q21 2SC1623-T2BL6x2
Q22
Q23 2SA812-T2BM6B
Q24 2SC1623-T2BL6
Q05 μPD4030BG
Q25 2SC1623-T2BL6
Q04 MC14572UBCP
J01 (J1002)
J02 (J1001)
J03 (P3)
J04 (P5001)
J05 (P5202)
J06 (P2)
J07 (J4004)
J08 (J3003)
J09 (P4503/4703/4903)
P01
JP01
GND
LAMP 6
HLT
RESET
CPU 5
5V
BUSY/MOD
ON AIR
STOP
TX
FM
CW
USB
MUTE
13.8V
CW
FM
-4V
7V
CENT
TX CW
USB/RX CW
GND
RLY TX B
TX 7
RESISTOR VALUES ARE IN Ω. 1/10W:
CAPACITOR VALUES ARE IN μF. 50wv:
UNLESS OTHERWISE NOTED.
(T)CAPACITORS ARE TANTULM. 10wv.

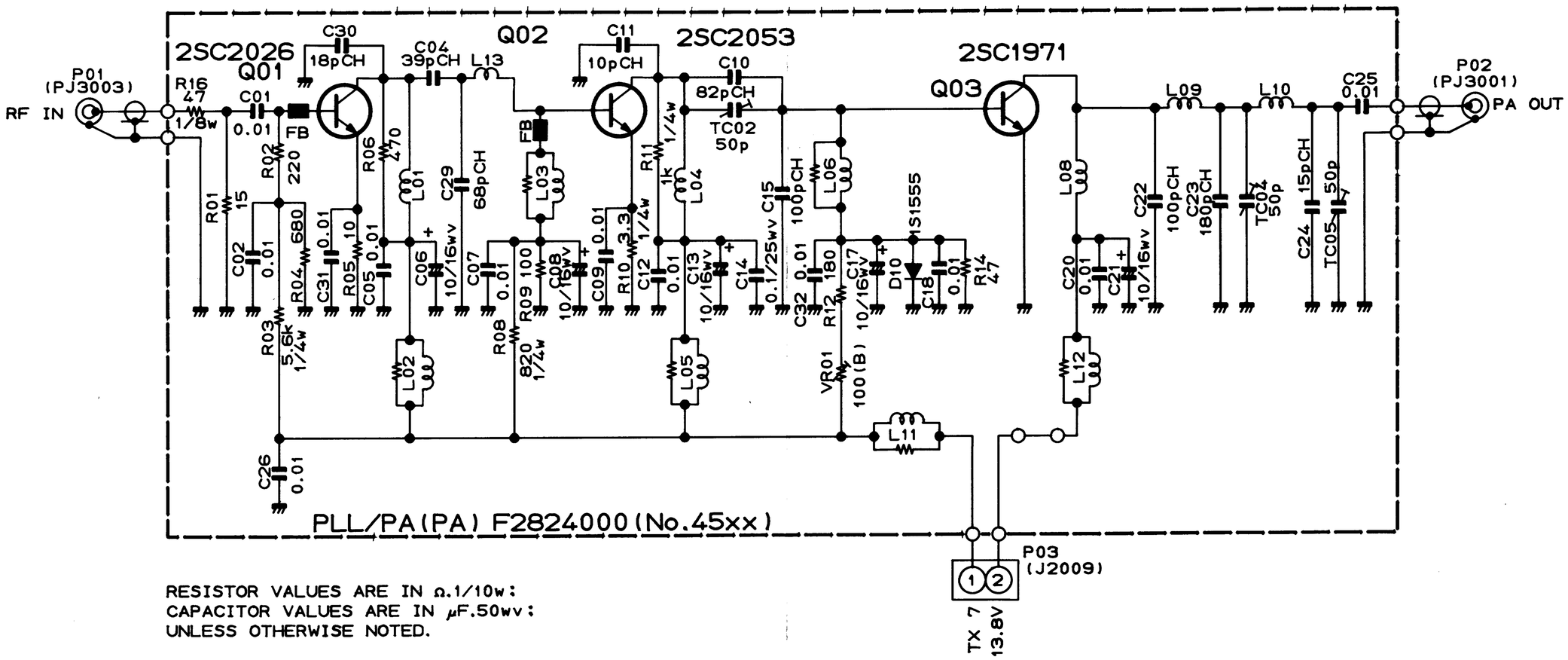

RESISTOR VALUES ARE IN Ω.1/10w:
CAPACITOR VALUES ARE IN μF.50wv:
UNLESS OTHERWISE NOTED.

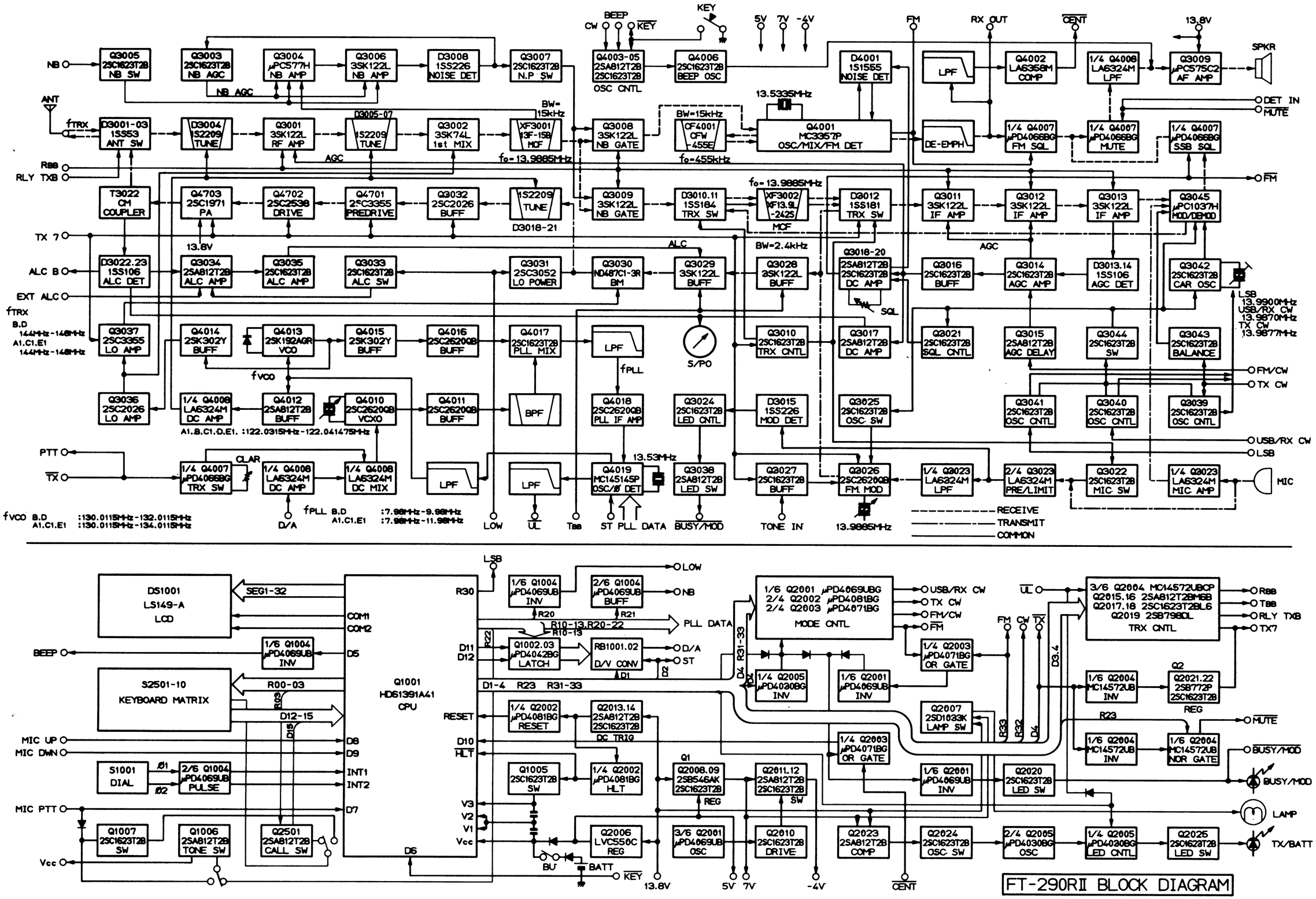
Q3005 2SC1623T2B NB SW
Q3003 2SC1623T2B NB AGC
Q3004 μPC577H NB AMP
Q3006 3SK122L NB AMP
D3008 1SS226 NOISE DET
Q3007 2SC1623T2B N.P SW
Q4003-05 2SA812T2B 2SC1623T2B OSC CNTL
Q4006 2SC1623T2B BEEP OSC
D4001 1S1555 NOISE DET
Q4002 LA6358M COMP
1/4 Q4008 LA6324M LPF
Q3009 μPC575C2 AF AMP
SPKR
D3001-03 1SS53 ANT SW
D3004 1S2209 TUNE
Q3001 3SK122L RF AMP
D3005-07 1S2209 TUNE
Q3002 3SK74L 1st MIX
XF3001 13F-15B MCF
Q3008 3SK122L NB GATE
CF4001 CFW-455E
Q4001 MC3357P OSC/MIX/FM DET
1/4 Q4007 μPD4066BG FM SQL
1/4 Q4007 μPD4066BG MUTE
1/4 Q4007 μPD4066BG SSB SQL
T3022 CM COUPLER
Q4703 2SC1971 PA
Q4702 2SC2538 DRIVE
Q4701 2SC3355 PREDRIVE
Q3032 2SC2026 BUFF
1S2209 TUNE
Q3009 3SK122L NB GATE
D3010.11 1SS184 TRX SW
XF3002 XF13.9L-242S MCF
D3012 1SS181 TRX SW
Q3011 3SK122L IF AMP
Q3012 3SK122L IF AMP
Q3013 3SK122L IF AMP
Q3045 μPC1037H MOD/DEMOD
D3022.23 1SS106 ALC DET
Q3034 2SA812T2B ALC AMP
Q3035 2SC1623T2B ALC AMP
Q3033 2SC1623T2B ALC SW
Q3031 2SC3052 LO POWER
Q3030 ND487C1-3R BM
Q3029 3SK122L BUFF
Q3028 3SK122L BUFF
Q3018-20 2SA812T2B 2SC1623T2B DC AMP
Q3016 2SC1623T2B BUFF
Q3014 2SC1623T2B AGC AMP
D3013.14 1SS106 AGC DET
Q3042 2SC1623T2B CAR OSC
LSB 13.9900MHz USB/RX CW 13.9870MHz TX CW 13.9877MHz
Q3037 2SC3355 LO AMP
Q4014 2SK302Y BUFF
Q4013 2SK192AGR VCO
Q4015 2SK302Y BUFF
Q4016 2SC2620QB BUFF
Q4017 2SC1623T2B PLL MIX
LPF
S/PO
Q3010 2SC1623T2B TRX CNTL
Q3017 2SA812T2B DC AMP
Q3021 2SC1623T2B SQL CNTL
Q3015 2SA812T2B AGC DELAY
Q3044 2SC1623T2B SW
Q3043 2SC1623T2B BALANCE
Q3036 2SC2026 LO AMP
1/4 Q4008 LA6324M DC AMP
Q4012 2SA812T2B BUFF
Q4010 2SC2620QB VCXO
Q4011 2SC2620QB BUFF
BPF
Q4018 2SC2620QB PLL IF AMP
Q3024 2SC1623T2B LED CNTL
D3015 1SS226 MOD DET
Q3025 2SC1623T2B OSC SW
Q3041 2SC1623T2B OSC CNTL
Q3040 2SC1623T2B OSC CNTL
Q3039 2SC1623T2B OSC CNTL
1/4 Q4007 μPD4066BG TRX SW
1/4 Q4008 LA6324M DC AMP
1/4 Q4008 LA6324M DC MIX
Q4019 MC145145P OSC/Ø DET
Q3038 2SA812T2B LED SW
Q3027 2SC1623T2B BUFF
Q3026 2SC2620QB FM MOD
1/4 Q3023 LA6324M LPF
2/4 Q3023 LA6324M PRE/LIMIT
Q3022 2SC1623T2B MIC SW
1/4 Q3023 LA6324M MIC AMP
MIC
RECEIVE
TRANSMIT
COMMON
fVCO B.D :130.0115MHz-132.0115MHz
A1.C1.E1 :130.0115MHz-134.0115MHz
fPLL B.D :7.98MHz-9.98MHz
A1.C1.E1 :7.98MHz-11.98MHz
DS1001 LS149-A LCD
S2501-10 KEYBOARD MATRIX
S1001 DIAL
2/6 Q1004 μPD4069UB PULSE
Q1001 HD61391A41 CPU
1/6 Q1004 μPD4069UB INV
2/6 Q1004 μPD4069UB BUFF
Q1002.03 μPD4042BG LATCH
RB1001.02 D/V CONV
1/4 Q2002 μPD4081BG RESET
Q2013.14 2SA812T2B 2SC1623T2B DC TRIG
Q1005 2SC1623T2B SW
1/4 Q2002 μPD4081BG HLT
Q2008.09 2SB546AK 2SC1623T2B
Q2011.12 2SA812T2B 2SC1623T2B SW
Q2006 LVC550C REG
3/6 Q2001 μPD4069UB OSC
Q2010 2SC1623T2B DRIVE
Q2023 2SA812T2B COMP
Q2024 2SC1623T2B OSC SW
2/4 Q2005 μPD4030BG OSC
1/4 Q2005 μPD4030BG LED CNTL
Q2025 2SC1623T2B LED SW
Q1007 2SC1623T2B SW
Q1006 2SA812T2B TONE SW
Q2501 2SA812T2B CALL SW
1/6 Q2001 μPD4069UB 2/4 Q2002 μPD4081BG 2/4 Q2003 μPD4071BG MODE CNTL
1/4 Q2003 μPD4071BG OR GATE
1/4 Q2005 μPD4030BG INV
1/6 Q2001 μPD4069UB INV
Q2007 2SD1023K LAMP SW
1/4 Q2003 μPD4071BG OR GATE
1/6 Q2001 μPD4069UB INV
Q2020 2SC1623T2B LED SW
3/6 Q2004 MC14572UBCP Q2015.16 2SA812T2BMBB Q2017.18 2SC1623T2BL6 Q2019 2SB798DL TRX CNTL
1/6 Q2004 MC14572UB INV
Q2021.22 2SB772P 2SC1623T2B REG
1/6 Q2004 MC14572UB INV
1/6 Q2004 MC14572UB NOR GATE
BUSY/MOD
LAMP
TX/BATT
FT-290RII BLOCK DIAGRAM