TA-F310R/F410R

SERVICE MANUAL

AEP Model
TA-F310R

Canadian Model
AEP Model
UK Model
E Model
TA-F410R

photo: TA-F410R

SPECIFICATIONS

Amplifier
Continuous RMS power output (both channels driven simultaneously)

AEP, West Germany models:

		TA-F310R	TA-F410R
DIN, 1 kHz	4 ohms	40 W + 40 W	70 W + 70 W
	8 ohms	29 W + 29 W	50 W + 50 W
20 Hz – 20 kHz THD 0.05%	4 ohms	27 W + 27 W	45 W + 45 W
	8 ohms	24 W + 24 W	35 W + 35 W

Canadian, UK and E models:

		TA-F410R
DIN, 1kHz	8 ohm only	70 W + 70 W
20 Hz – 20 kHz THD 0.05%		50 W + 50 W

Output

Output jack	Jack type	Voltage/impedance
REC OUT	Phono jacks	Voltage 150 mV Impedance 1 kohms
SPEAKERS	———	**AEP, West Germany models** Accepts speakers of 4 – 16 ohms. **Canadian, UK and E models** Accepts speakers of 8 – 16 ohms.
HEAD-PHONES	Stereo phone jack	Accepts low and high impedance headphones.

Tone controls

	Response	Turnover frequency
BASS	±8 dB (100 Hz)	500 Hz
TREBLE	±8 dB (15 kHz)	3 kHz

Input

Input jack		Jack type	Sensitivity	Impedance	S/N (weighting network, input level)
PHONO	MM	Phono	2.0 mV	50 kilohms	70 dB (A, 2 mV)
TUNER, CD, VIDEO/AUX, TAPE 1, TAPE 2/DAT		Phono	150 mV	50 kilohms	100 dB (150 mV)

Harmonic distortion
TA-F310R and TA-F410R UK, AEP and West Germany models:
Less than 0.7% at rated output
Other TA-F410R models:
Less than 0.05% at rated output
Intermodulation (IM) distortion (60 Hz:7 kHz = 4:1)
Less than 0.05% at rated output
Frequency response
PHONO: RIAA equalization curve ±0.5 dB
TUNER, CD, VIDEO/AUX, TAPE 1, TAPE 2/DAT: 7 Hz – 100 kHz ±3 dB

Residual noise Less than 170 μV (network A)
Damping factor 40 (8 ohms, 1 kHz)

—Continued on page 2—

INTEGRATED STEREO AMPLIFIER

SONY®

General

System	Preamplifier: Low-noise, high-gain equalizer amplifier Power amplifier: Pure-complementary SEPP OCL power amplifier with all stages directly coupled
Power requirements	Canadian model: 120 V AC, 60 Hz AEP and West Germany models: 220 V AC, 50 Hz UK. model: 240 V AC, 50 Hz E model: 120 V, 220 V or 240 V AC adjustable, 50/60Hz
Power consumption	Models for AEP and West Germany TA-F310R: 80 W TA-F410R: 130 W UK. model: TA-F410R: 220 W Canadian model: TA-F410R: 270 VA E model: TA-F410R: 130 W
Dimensions	Approx. 430 × 135 × 315 mm (w/h/d) (17 × 5 3/8 × 12 1/2 inches)
Weight	TA-F310R: Approx. 5.9 kg (13 lb 1 oz) TA-F410R: Approx. 7.4 kg (16 lb 5 oz)
Accessories	Remote commander RM-S310 (1) Sony SUM-3 (NS) batteries (2)

Design and specifications subject to change without notice.

MODEL IDENTIFICATION

—Specification Label—

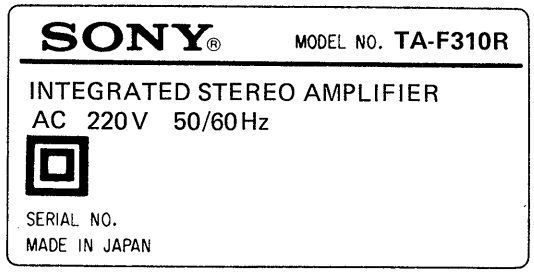

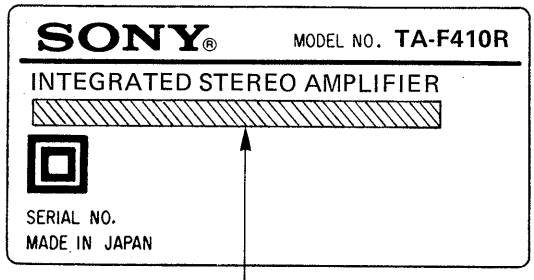

Canadian Model: AC 120V 60Hz 270VA
UK Model: AC240V 50/60Hz
E Model: AC 120/220/240V 50/60Hz 130W
West Germany Model:
AC 220V 50/60Hz

SAFETY-RELATED COMPONENT WARNING!!

COMPONENTS IDENTIFIED BY MARK ⚠ OR DOTTED LINE WITH MARK ⚠ ON THE SCHEMATIC DIAGRAMS AND IN THE PARTS LIST ARE CRITICAL TO SAFE OPERATION. REPLACE THESE COMPONENTS WITH SONY PARTS WHOSE PART NUMBERS APPEAR AS SHOWN IN THIS MANUAL OR IN SUPPLEMENTS PUBLISHED BY SONY.

SAFETY CHECK-OUT

After correcting the original service problem, perform the following safety check before releasing the set to the customer:
Check the antenna terminals, metal trim, "metallized" knobs, screws, and all other exposed metal parts for AC leakage. Check leakage as described below.

LEAKAGE TEST

The AC leakage from any exposed metal part to earth ground and from all exposed metal parts to any exposed metal part having a return to chassis, must not exceed 0.5 mA (500 microampers). Leakage current can be measured by any one of three methods.

1. A commercial leakage tester, such as the Simpson 229 or RCA WT-540A. Follow the manufacturers' instructions to use these instruments.
2. A battery-operated AC milliammeter. The Data Precision 245 digital multimeter is suitable for this job.
3. Measuring the voltage drop across a resistor by means of a VOM or battery-operated AC voltmeter. The "limit" indication is 0.75 V, so analog meters must have an accurate low-voltage scale. The Simpson 250 and Sanwa SH-63Trd are examples of a passive VOM that is suitable. Nearly all battery operated digital multimeters that have a 2 V AC range are suitable. (See Fig. A)

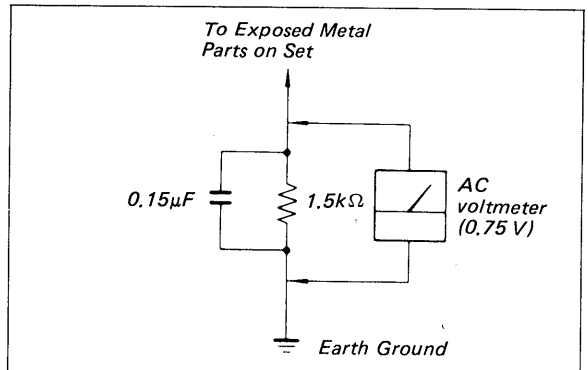

Fig. A. Using an AC voltmeter to check AC leakage.

ATTENTION AU COMPOSANT AYANT RAPPORT À LA SÉCURITÉ!

LES COMPOSANTS IDENTIFIÉS PAR UNE MARQUE ⚠ SUR LES DIAGRAMMES SCHÉMATIQUES ET LA LISTE DES PIÈCES SONT CRITIQUES POUR LA SÉCURITÉ DE FONCTIONNEMENT. NE REMPLACER CES COMPOSANTS QUE PAR DES PIÈCES SONY DONT LES NUMÉROS SONT DONNÉS DANS CE MANUEL OU DANS LES SUPPLÉMENTS PUBLIÉS PAR SONY.

TABLE OF CONTENTS

On operating voltage

Before operating the unit, check that the operating voltage of your unit is identical with the voltage of your local power supply.

Where purchased	Operating voltage
Canadian model	120 V AC
UK model	240 V AC
AEP, West Germany model	220 V AC
E model	120 V, 220 V or 240 V AC adjustable The voltage selector is located on the rear panel. If the selector must be reset, disconnect the AC power cord and set the selector to the proper voltage of your local power supply.

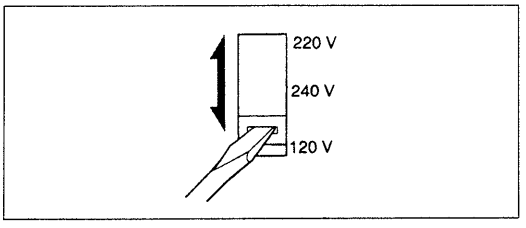

SECTION 1 GENERAL

Parts identification

figure: TA-F310R

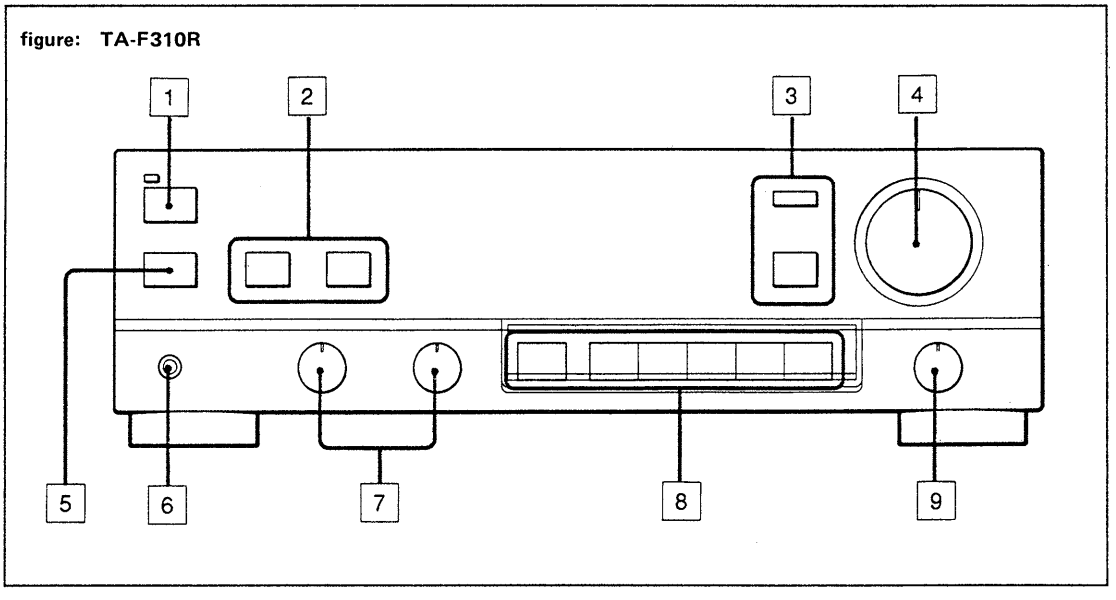

1 **POWER switch**
2 **SPEAKERS selector**
Button selectors for TA-F310R and rotary selector for TA-F410R.
3 **SOURCE DIRECT switch and indicaotr**
4 **VOLUME control**
5 **Remote control sensor**
6 **HEADPHONES jack**
7 **TONE controls**
8 **INPUT SELECTOR and MONITOR**
9 **BALANCE control**
10 **REC OUT (Recording out) SELECTOR (TA-F410R only)**

Connections

Notes on Connection

- Connect the AC power cord last. Make sure power is off.
- Cord plugs and jacks are color coded. Red plugs and jacks are for right channel (R) and white ones for left channel (L).
- Fully insert cable connectors into jacks. Loose connections may cause hum or noise.

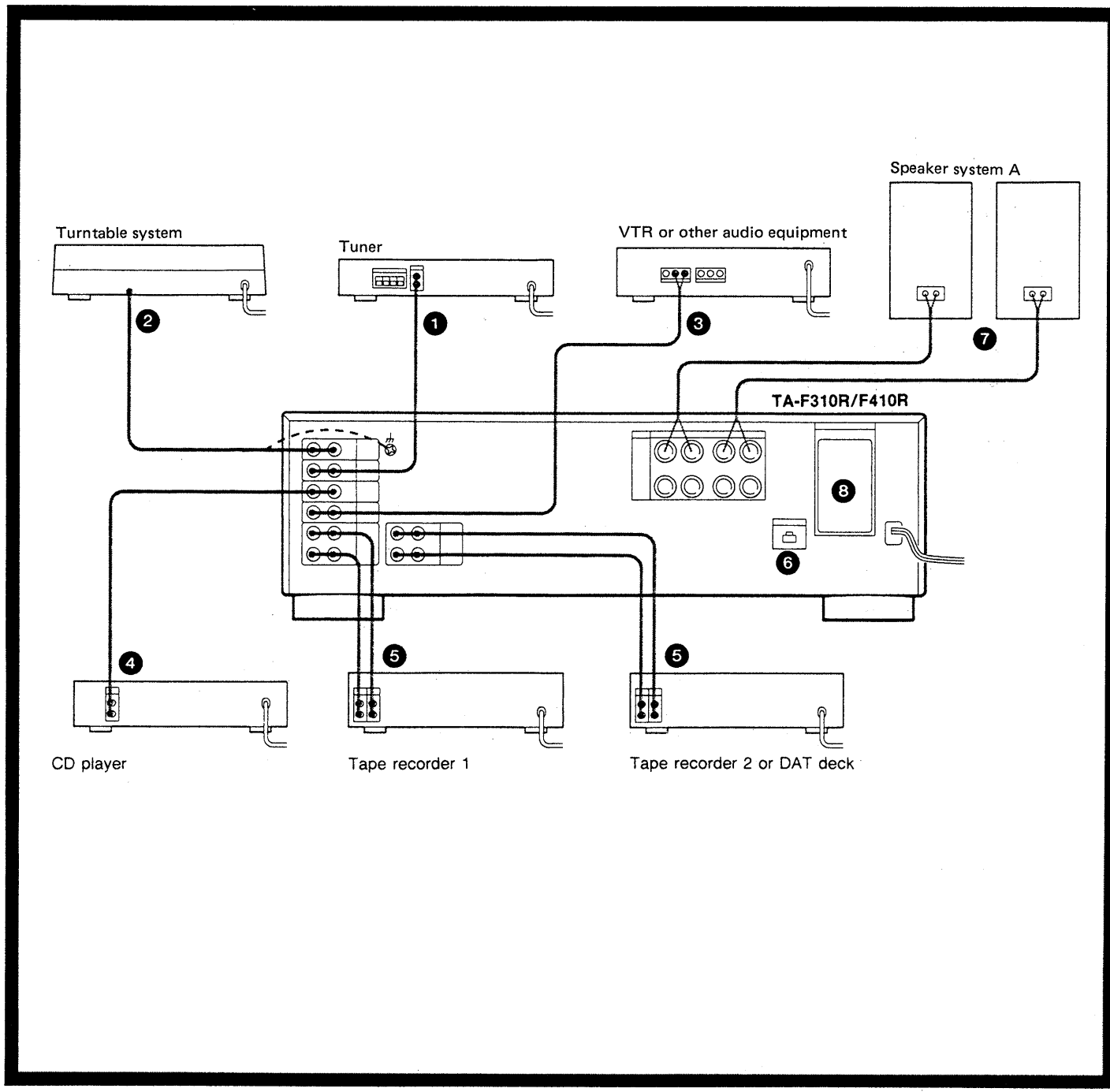

SECTION 2
DISASSEMBLY

Note: Follow the disassembly procedure in the numerical order given.

1. Remove screws x4.
2. Push leaves ❷ down to release 4 claws.
3. Release claws ❸ in the bottom.
4. Pull front panel in the direction of arrow ❹ .

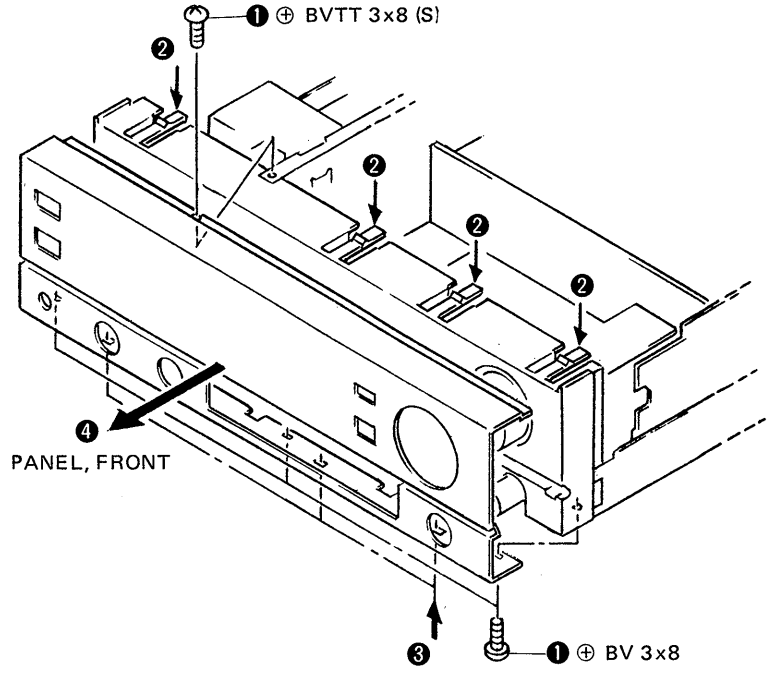

SECTION 3
ADJUSTMENTS

Bias Current Adjustment

Note: This adjustment should be performed under thermal stable condition. Befor starting the adjustment, wait for more than an hour after switch off for cooling, and perform the adjustment within one minute after swiching on.

Procedure:

1. Set main volume to minimum position.
2. Switch on the set.
3. Adjust RV500 (RV600 for right channel) so that the voltage across TP500 and TP600 becomes the value indicated below.

Adjustment Values:

TA-F310R	4 mV ± 0.3 mV
TA-F410R	2 mV ± 0.3 mV

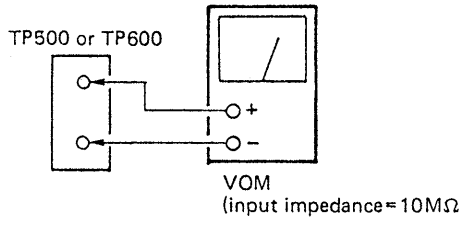

Adjustment Location:

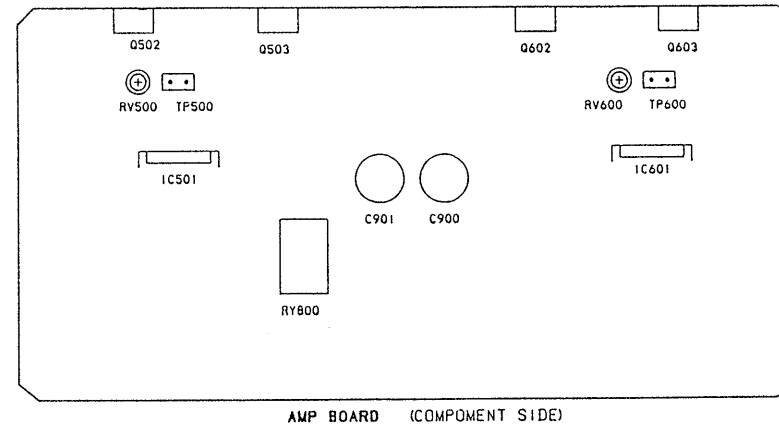

AMP BOARD (COMPONENT SIDE)

SECTION 4
DIAGRAMS

4-1. BLOCK DIAGRAM

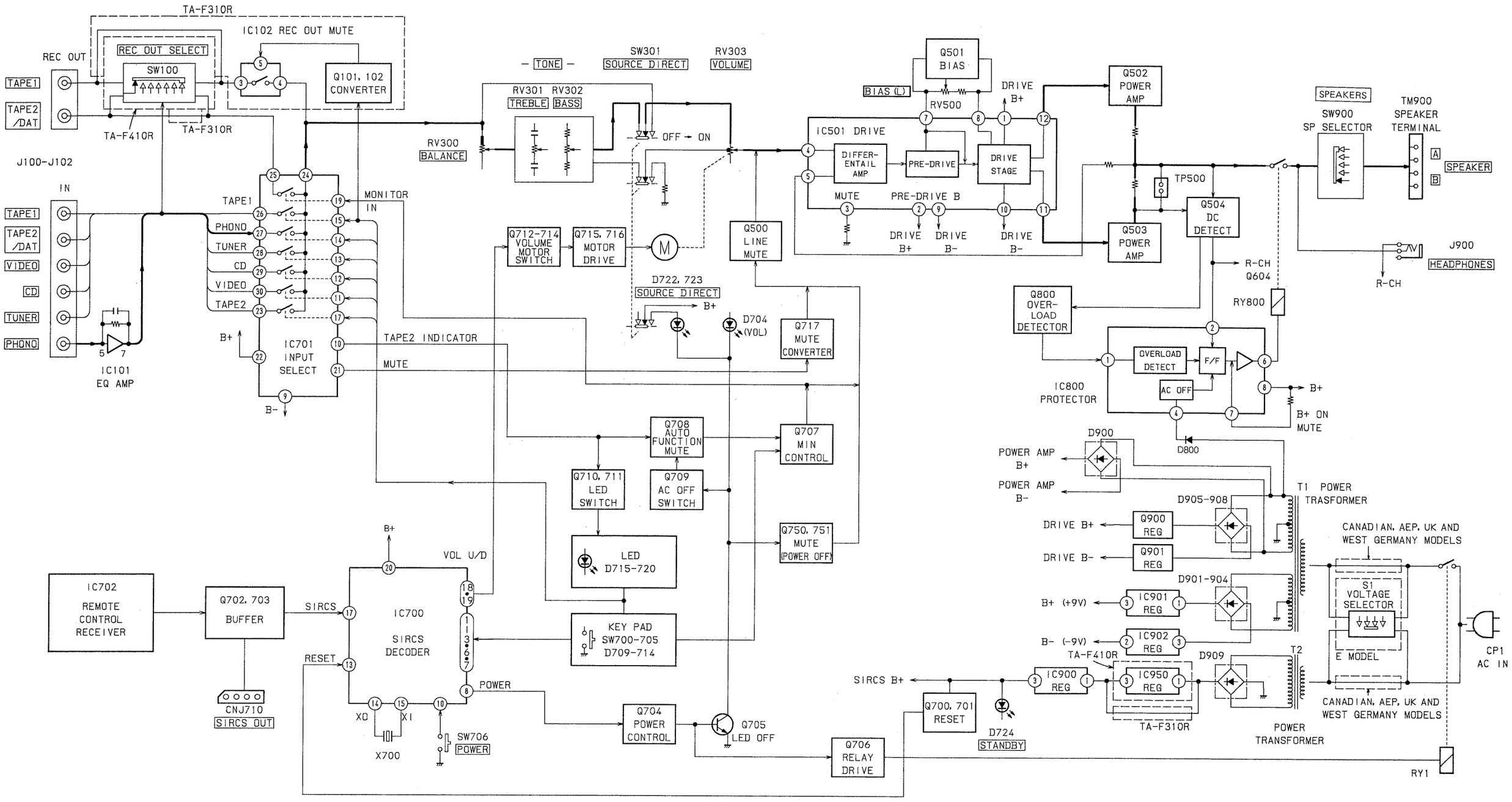

4-2. CIRCUIT BOARDS LOCATION

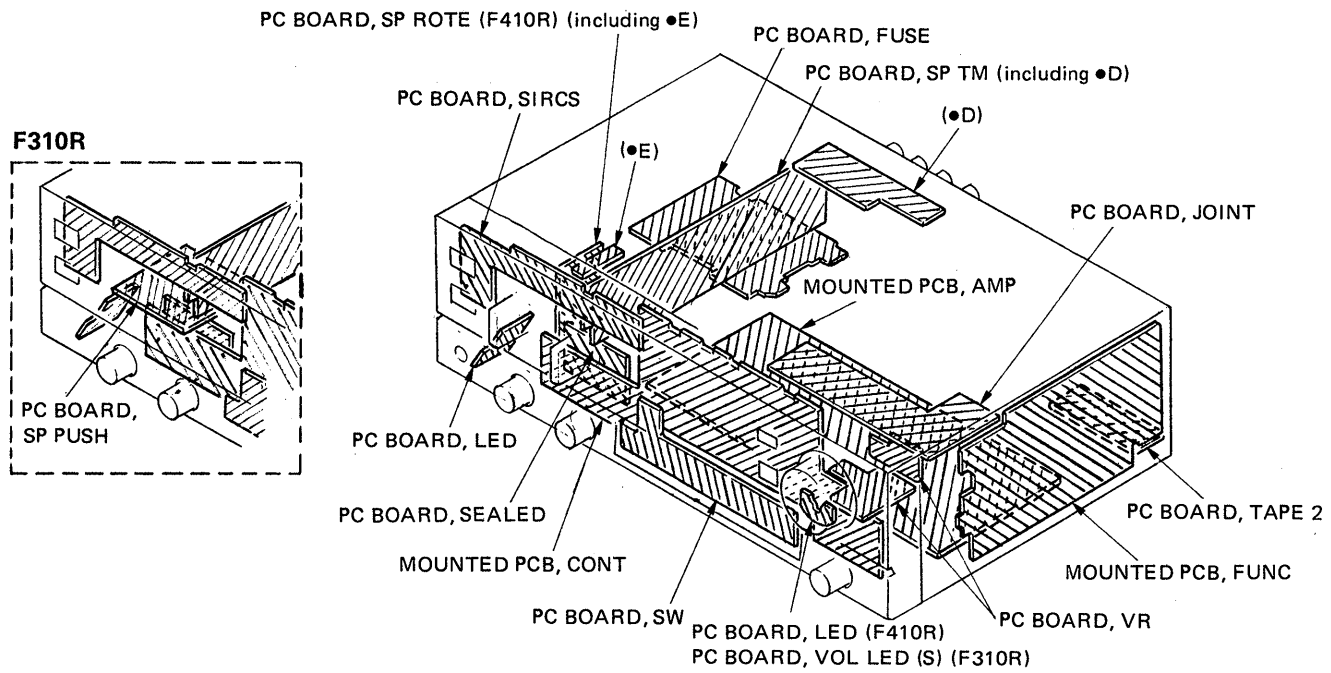

4-3. SEMICONDUCTOR LEAD LAYOUTS

LC7818

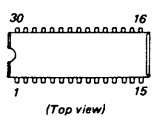

M50761-258P

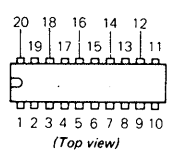

M5F7805

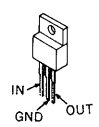

GP1U52XB

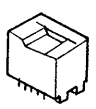

M5F7909

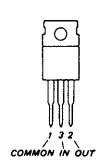

RC7809FA

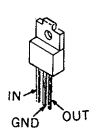

M5218L
UPC1237HA

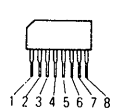

UPC1298V

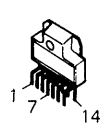

2SB1014

2SB1187-F

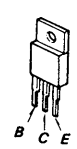

2SC2785-HFE
2SA1175-HFE

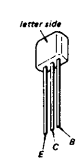

2SC3400
DTA124ES

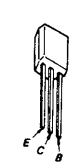

2SD1388
2SC1841-PA
2SC3622A-L

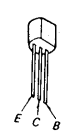

2SC4386-OPY-LF
2SA1671-OPY-LF

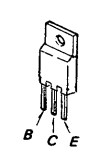

2SD1761-E

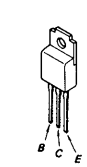

US1060M
HZS6A1L

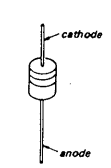

10E2N
HZ5ALL
US1060M
1S1585

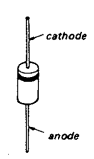

RBV-602-01

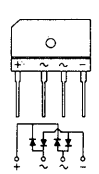

S1VB40

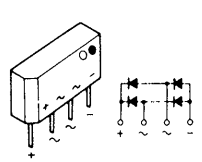

SEL1515C-CD

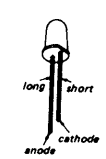

SEL2210S-C

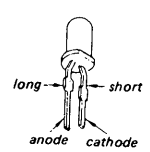

SEL2510C

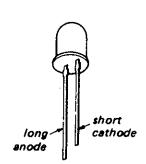

SEL2510W

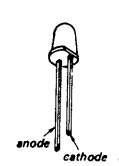

● SEMICONDUCTOR LOCATIONS

Ref. No.	Location	Ref. No.	Location
D501	B-23	D914	(CND) ····· B-4
D502	B-23		(E) ····· H-4
D601	C-18		(AEP, WG, UK) B-1
D602	C-18		
D700	J-17	IC101	B-37
D701	I-20	IC102	(F310R) ···· E-32
D702	B-32	IC501	C-25
D703	B-33	IC601	C-19
D704	(F310R) ···· G-15	IC700	J-19
	(F410R) ···· G-17	IC701	C-32
D705	J-21	IC702	I-28
D706	J-21	IC800	D-26
D707	J-21	IC900	(CND) ····· C-5
D708	J-21		(E) ····· H-5
D709	J-21		(AEP, WG, UK) C-1
D710	I-20	IC901	C-17
D711	I-20	IC902	C-17
D712	I-20	IC950	(E) ····· H-5
D713	J-19		
D714	J-19	Q101	(F310R) ···· E-32
D715	K-20	Q102	(F310R) ···· E-32
D716	K-19	Q500	D-24
D717	K-18	Q501	A-25
D718	K-17	Q502	A-26
D719	K-16	Q503	A-23
D720	K-15	Q504	B-23
D721	B-34	Q600	D-18
D722	I-15	Q601	A-19
D723	I-15	Q602	A-20
D724	I-29	Q603	A-18
D725	B-34	Q604	B-18
D750	D-32	Q700	J-17
D751	(F410R) ···· K-20	Q701	J-18
D752	(F410R) ···· K-20	Q702	I-21
D753	(F410R) ···· K-20	Q703	I-20
D754	(F410R) ···· K-20	Q704	K-18
D755	(F410R) K-20	Q705	J-17
D756	B-35	Q706	(CND) ····· B-4
D757	I-21		(E) ····· H-4
D758	B-34		(AEP, WG, UK) B-11
D800	E-26	Q707	B-34
D801	D-24	Q708	B-34
D802	D-24	Q709	B-34
D900	D-22	Q710	(F410R) ···· J-21
D901	E-17	Q711	(F410R) ···· J-21
D902	E-17	Q712	I-20
D903	E-17	Q713	I-20
D904	E-17	Q714	I-19
D905	D-21	Q715	I-19
D906	C-20	Q716	I-18
D907	D-20	Q717	B-35
D908	C-20	Q750	B-35
D909	(CND) ····· B-5	Q751	B-34
	(E) ····· G-5	Q800	C-26
	(AEP, WG, UK) B-11	Q900	D-19
D913	(CND) ····· B-4	Q901	D-20
	(E) ····· H-4		
	(AEP, WG, UK) B-10		

4-4. PRINTED WIRING BOARDS

- See page 8 for Circuit Boards Location and Semiconductor Lead Layouts.
- See apge 9 for Semiconductor Location.

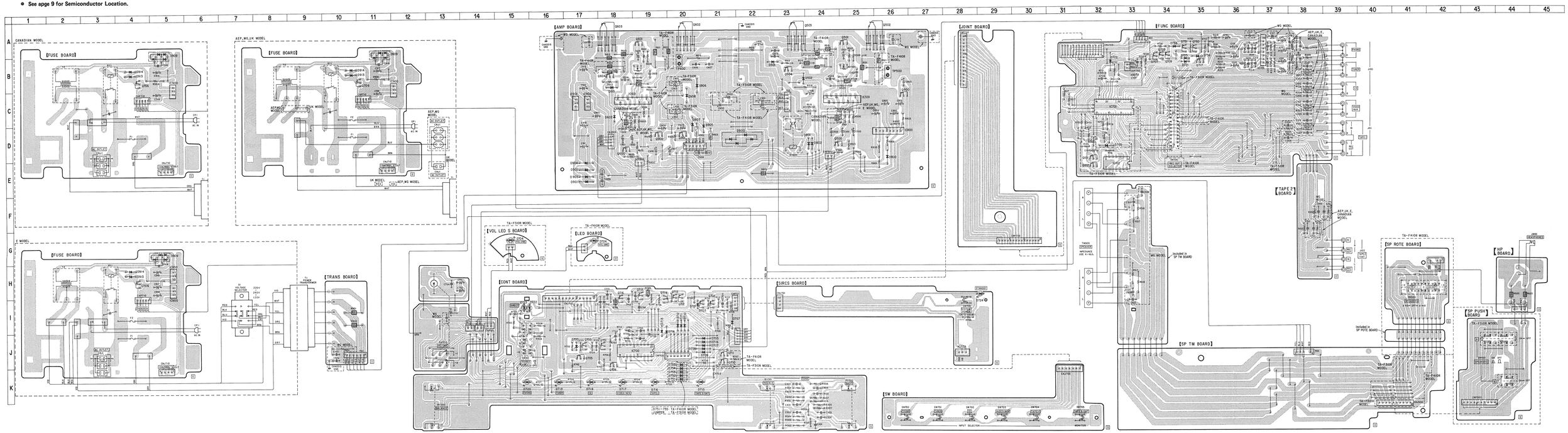

4-5. SCHEMATIC DIAGRAM

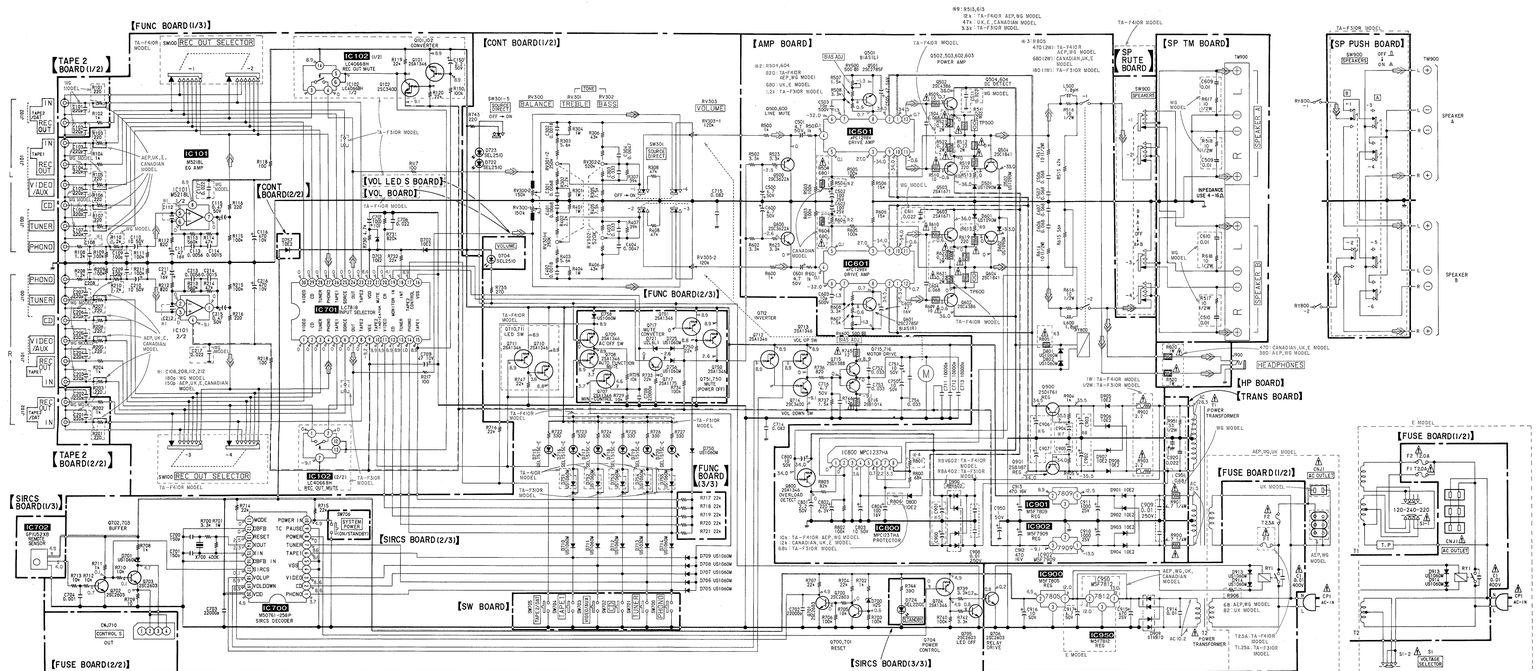

- All capacitors are in μF unless otherwise noted. pF: μμF 50WV or less are not indicated except for electrolytics and tantalums.
- All resistors are in Ω and ¼ W or less unless otherwise specified.
- : nonflammable resistor.
- : fusible resistor.
- : B +LINE
- : B −LINE
- : adjustment for repair.
- Voltage are dc with respect to ground under no signal conditions.
  no mark: PHONO
- Voltages are taken with a VOM (Input impedance 50KΩ)
  Voltage variations may be noted due to normal production tolerances.
- Signal path.
  : PHONO
- abbreviation
  WG: West Germany

Note:	Note:
The components identified by mark ⚠ or dotted line with mark ⚠ are critical for safety. Replace only with part number specified.	Les composants identifiés par une marque ⚠ sont critiques pour la sécurité. Ne les remplacer que par une pièce portant le numéro spécifié.

IC800 μPC1237HA

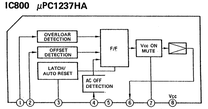

IC501, IC601 UPC1298

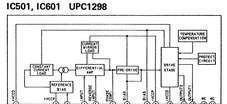

SECTION 5
EXPLODED VIEWS

NOTE:

- The mechanical parts with no reference number in the exploded views are not supplied.
- The construction parts of an assembled part are indicated with a collation number in the remark column.
- Items marked "★" are not stocked since they are seldom required for routine service. Some delay should be anticipated when ordering these items.
- Due to standardization, parts with part number suffix -XX and -X may be different from the parts specified in the components used on the set.
- Color Indication of Appearance Parts Example:
  (RED) . . . KNOB, BALANCE (WHITE)
  ↑ Cabinet's Color ↑ Parts' Color
- WG: West Germany model.

The components identified by mark ⚠ or dotted line with mark ⚠ are critical for safety.
Replace only with part number specified.

Les composants identifiés par une marque ⚠ sont critiques pour la sécurité.
Ne les remplacer que par une pièce portant le numéro spécifié.

1. GENERAL (1)

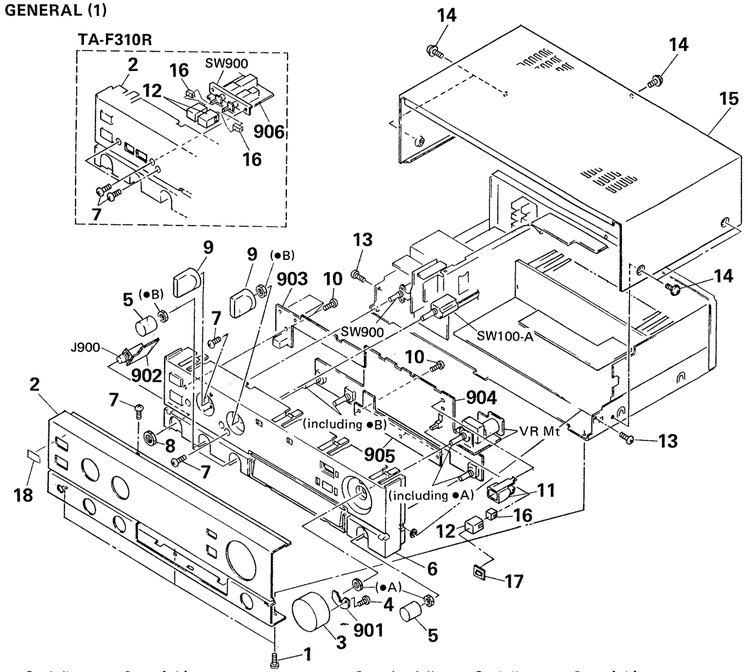

No.	Part No.	Description	Remarks
1	3-703-685-21	SCREW (+BV 3X8)	
2	4-931-915-01	(F410R)...PANEL, FRONT	
	4-931-915-11	(F310R).....PANEL, FRONT	
3	X-4906-828-1	(F410R)...KNOB (47) ASSY	
	4-929-288-01	(F310R).....KNOB (VOL 47)	
4	7-685-534-19	SCREW +BTP 2.6X8 TYPE2 N-S	
5	4-916-746-11	KNOB (DIA. 21), ROUND	
6	X-4885-954-1	(F410R)...PANEL (BASE) ASSY	
	X-4885-955-1	(F310R).....PANEL (BASE) ASSY	
7	7-682-548-04	SCREW +BVTT 3X8 (S)	
8	4-931-902-01	NUT (M12X1)	
9	4-916-729-01	(F410R)...KNOB (DIA.29)	
10	4-928-635-01	SCREW, +BV (2.6X8) TAPPING	
11	*4-921-389-01	HOUSE	
12	4-908-875-01	KNOB, SQUARE	
13	7-685-646-79	SCREW +BVTP 3X8 TYPE2 N-S	
14	3-704-366-01	SCREW (CASE) (M3X8)	
15	4-929-294-11	CASE	
16	4-864-307-00	RING	
17	4-929-284-01	PLATE, INDICATION	
18	4-908-848-01	EMBLEM, SONY	
901	*1-631-765-11	(F410R)....PC BOARD, LED	
	*1-631-777-11	(F310R)....PC BOARD, VOL LED (S)	
902	*1-631-759-11	PC BOARD, HP	
903	*1-631-764-11	PC BOARD, SIRCS	
904	*A-4333-568-A	(F410R:Canadian,AEP,UK,E) ....MOUNTED PCB, CONT	
	*A-4333-569-A	(F310R)....MOUNTED PCB, CONT	
	*A-4333-841-A	(WG).....MOUNTED PCB, CONT	
905	*1-631-771-11	PC BOARD, SW	
906	*1-631-758-11	(F310R)...PC BOARD, SP PUSH	
SW100-A	1-571-972-11	(F410R)...SWITCH, ROTARY	
SW900	1-571-973-11	(F410R)...SWITCH, ROTARY (SPEAKER)	
SW900	1-571-971-11	(F310R)...SWITCH, PUSH (2 KEY)(SPEAKER)	

2. GENERAL (2)

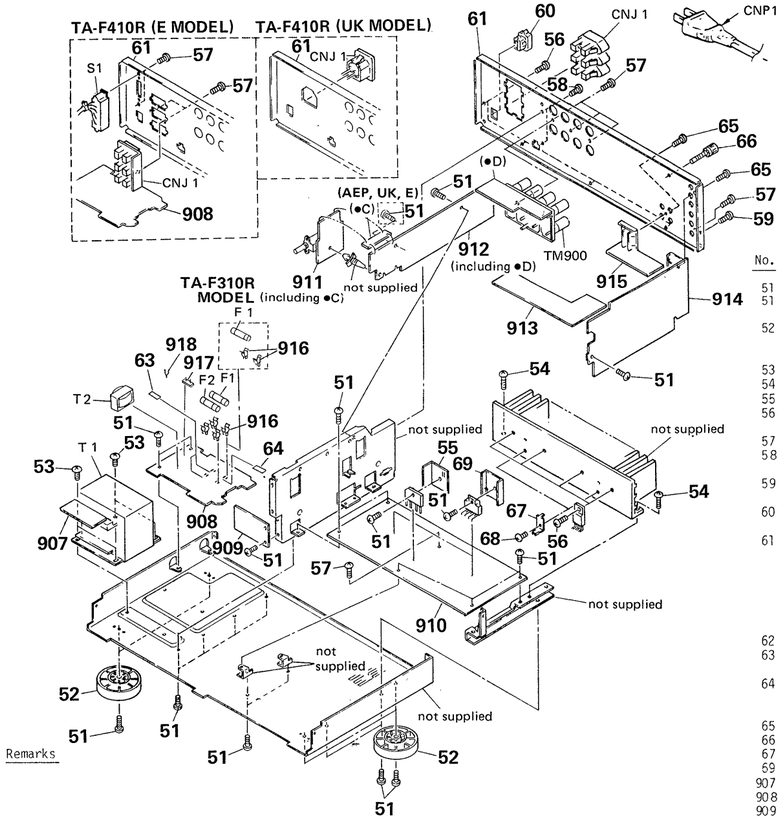

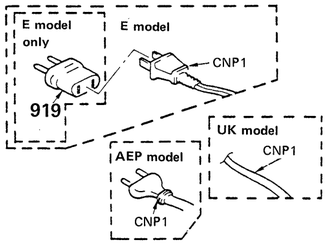

No.	Part No.	Description	Remarks
51	3-703-685-21	SCREW (+BV 3X8)	
51	7-682-548-04	SCREW +BVTT 3X8 (S)	
52	X-3304-938-2	(AEP,WG,UK)....FOOT ASSY	
	X-4885-950-1	(Canadian,E)...FOOT ASSY	
53	7-682-560-04	SCREW +BVTT 4X6 (S)	
54	7-682-548-01	SCREW +B 3X8	
55	*4-931-903-01	(F410R:AEP,WG)...HEAT SINK (D1)	
56	7-682-950-01	SCREW +PSW 3X12	
57	7-685-646-79	SCREW +BVTP 3X8 TYPE2 N-S	
58	7-682-547-09	SCREW +BVTT 3X6 (S)	
59	7-685-646-19	SCREW +BVTP 3X8	
60	*3-703-244-00	(EXCEPT E)...BUSHING (2104), CORD	
61	*4-931-917-31	(WG).....PANEL, BACK	
	*4-931-910-01	(F310R).....PANEL, BACK	
	*4-931-917-01	(Canadian)....PANEL, BACK	
	*4-931-917-21	(F410R:AEP)...PANEL, BACK	
	*4-931-917-41	(WG).....PANEL, BACK	
	*4-931-917-51	(E).....PANEL, BACK	
62	3-703-571-00	(E)...BUSHING (4516), CORD	
63	3-701-948-17	(E)...LABEL (T2A), FUSE	
64	3-701-946-25	(Canadian)...LABEL (3.15A 125V), FUSE	
	3-701-947-12	(F310R).....LABEL (T1.2A), FUSE	
65	7-621-849-00	SCREW, TAPPING	
66	3-706-165-00	SCREW	
67	*4-929-285-01	BRACKET (TR)	
69	*4-928-442-11	(F310R).....HEAT SINK (S)	
907	*1-631-763-11	(Canadian,WG,UK,E)...PC BOARD, TRANS	
908	*1-631-770-11	PC BOARD, FUSE	
909	1-631-767-11	PC BOARD, SEALED	
910	*A-4333-541-A	(Canadian)....MOUNTED PCB, AMPLIFIER	
	*A-4333-542-A	(F410R:AEP)...MOUNTED PCB, AMPLIFIER	
	*A-4333-543-A	(WG).....MOUNTED PCB, AMPLIFIER	
	*A-4333-544-A	(UK).....MOUNTED PCB, AMPLIFIER	
	*A-4333-545-A	(E).....MOUNTED PCB, AMPLIFIER	
	*A-4333-546-A	(F310R).....MOUNTED PCB, AMPLIFIER	
911	*1-631-761-11	(F410R).....PC BOARD, SP ROTE	
912	*1-631-760-11	PC BOARD, SP TM	
913	*1-631-762-11	PC BOARD, JOINT	
914	*A-4333-558-A	(Canadian,AEP,UK,E)...MOUNTED PCB, FUNC	
	*A-4333-559-A	(WG).....MOUNTED PCB, FUNC	
	*A-4333-560-A	(F310R).....MOUNTED PCB, FUNC	
915	*1-631-768-11	PC BOARD, TAPE2	
916	*1-533-213-31	HOLDER, FUSE	
917	1-535-139-00	BASE POST	
918	1-535-771-11	TERMINAL	
CNJ1	*1-526-751-00	(UK).....OUTLET, AC (AC OUTLET)	
CNJ1	*1-526-794-11	(AEP,WG)...OUTLET, AC (AC OUTLET)	
CNJ1	*1-540-042-11	(E).....OUTLET, AC (NONPOLAR)(3P) (AC OUTLET)	
CNJ1	*1-540-061-11	(Canadian).OUTLET, AC(POLAR)(AC OUTLET)	
CP1	⚠1-558-686-11	(Canadian)...CORD, POWER	
CP1	⚠1-551-188-XX	(E).....CORD, POWER	
CP1	⚠1-555-750-00	(AEP,WG).....CORD, POWER	
CP1	⚠1-556-035-00	(UK).....CORD, POWER	
F1	⚠1-532-203-11	(E).....FUSE, TIME-LAG T2.0A	
F1	⚠1-532-285-11	(F310R)....FUSE, TIME-LAG T1.25A	
F1	⚠1-532-286-11	(F410R:AEP,WG,UK)...FUSE, TIME-LAG T2.5A	
F1	⚠1-532-745-11	(Canadian)...FUSE, GLASS TUBE TSC3.15A	
F2	⚠1-532-203-11	(E).....FUSE, TIME-LAG T2.0A	
F2	⚠1-532-286-11	(AEP,WG,UK)...FUSE, TIME-LAG T2.5A	
SW900	1-571-973-11	(F410R)...SWITCH, ROTARY (SPEAKER)	
SW900	1-571-971-11	(F310R)...SWITCH, PUSH (2 KEY)(SPEAKER)	
T1	⚠1-449-743-11	(F310R).....TRANSFORMER, POWER	
T1	⚠1-449-744-11	(F410R:AEP,WG)...TRANSFORMER, POWER	
T1	⚠1-449-745-11	(Canadian).....TRANSFORMER, POWER	
T1	⚠1-449-746-11	(UK).....TRANSFORMER, POWER	
T1	⚠1-449-747-11	(E).....TRANSFORMER, POWER	
T2	⚠1-449-296-11	(Canadian)....TRANSFORMER, POWER	
T2	⚠1-449-299-11	(E).....TRANSFORMER, POWER	
T2	⚠1-449-297-11	(AEP,WG,UK)...TRANSFORMER, POWER	
TM900	1-537-227-11	(AEP).....TERMINAL BOARD (SP)	
TM900	1-537-228-11	(Canadian,WG,UK,E)..TERMINAL BOARD (SP)	

Note:
The components identified by mark ⚠ or dotted line with mark ⚠ are critical for safety.
Replace only with part number specified.

Note:
Les composants identifiés par une marque ⚠ sont critiques pour la sécurité.
Ne les remplacer que par une pièce portant le numéro spécifié.

SECTION 6
ELECTRICAL PARTS LIST

NOTE:

- Due to standardization, replacements in the parts list may be different from the parts specified in the diagrams or the components used on the set.
- Items marked "★" are not stocked since they are seldom required for routine service. Some delay should be anticipated when ordering these items.
- If there are two or more same circuits in a set such as a stereophonic machine, only typical circuit parts may be indicated and capacitors and resistors in other same circuits may be omitted.

CAPACITORS:
MF: μF, PF: μμF.

RESISTORS
- All resistors are in ohms.
- F: nonflammable

COILS
- MMH: mH, UH: μH

SEMICONDUCTORS
In each case, U: μ, for example:
UA...: μA..., UPA...: μPA...,
UPC...: μPC, UPD...: μPD...

- WG: West Germany model

The components identified by mark ⚠ or dotted line with mark ⚠ are critical for safety.
Replace only with part number specified.

Les composants identifiés par une marque ⚠ sont critiques pour la sécurité.
Ne les remplacer que par une pièce portant le numéro spécifié.

Ref.No.	Part No.	Description
901	*1-631-765-11	(F410R)...PC BOARD, LED
	*1-631-777-11	(F310R)...PC BOARD, VOL LED
902	*1-631-759-11	PC BOARD, HP
903	*1-631-764-11	PC BOARD, SIRCS
904	*A-4333-568-A	(F410R:Canadian,AEP,UK,E) ....MOUNTED PCB, CONT
	*A-4333-569-A	(F310R)....MOUNTED PCB, CONT
	*A-4333-841-A	(WG).....MOUNTED PCB, CONT
905	*1-631-771-11	PC BOARD, SW
906	*1-631-758-11	(F310R)...PC BOARD, SP PUSH
907	*1-631-763-11	(Canadian,WG,UK,E)...PC BOARD, TRANS
908	*1-631-770-11	PC BOARD, FUSE
909	1-631-767-11	PC BOARD, SEALED
910	*A-4333-541-A	(Canadian)....MOUNTED PCB, AMPLIFIER
	*A-4333-542-A	(F410R:AEP)...MOUNTED PCB, AMPLIFIER
	*A-4333-543-A	(WG).....MOUNTED PCB, AMPLIFIER
	*A-4333-544-A	(UK).....MOUNTED PCB, AMPLIFIER
	*A-4333-545-A	(E).....MOUNTED PCB, AMPLIFIER
	*A-4333-546-A	(F310R).....MOUNTED PCB, AMPLIFIER
911	*1-631-761-11	(F410R).....PC BOARD, SP ROTE
912	*1-631-760-11	PC BOARD, SP TM
913	*1-631-762-11	PC BOARD, JOINT
914	*A-4333-558-A	(Canadian,AEP,UK,E)...MOUNTED PCB, FUNC
	*A-4333-559-A	(WG).....MOUNTED PCB, FUNC
	*A-4333-560-A	(F310R).....MOUNTED PCB, FUNC
915	*1-631-768-11	PC BOARD, TAPE2
916	*1-533-213-31	HOLDER, FUSE
917	*1-535-139-00	BASE POST 22MM (10MM PITCH) 2P
918	*1-535-771-11	TERMINAL
919	⚠.1-526-565-00	(E)····AC PLUG ADAPTOR
C1	⚠.1-161-744-00	CERAMIC 0.01MF 400V
C101	1-162-286-31	(WG)...CERAMIC 220PF 10% 50V
C102	1-162-286-31	(WG)...CERAMIC 220PF 10% 50V
C103	1-162-286-31	(WG)...CERAMIC 220PF 10% 50V
C104	1-162-286-31	(WG)...CERAMIC 220PF 10% 50V
C105	1-162-286-31	(WG)...CERAMIC 220PF 10% 50V
C106	1-162-286-31	(WG)...CERAMIC 220PF 10% 50V
C107	1-162-286-31	(WG)...CERAMIC 220PF 10% 50V
C108	1-162-284-31	(WG).....CERAMIC 150PF 10% 50V
C108	1-162-285-31	(EXCEPT WG)...CERAMIC 180PF 10% 50V
C109	1-162-282-31	(WG)...CERAMIC 100PF 10% 50V
C110	1-123-875-11	ELECT 10MF 20% 50V
C111	1-124-477-11	ELECT 47MF 20% 16V
C112	1-162-284-31	(WG).....CERAMIC 150PF 10% 50V
C112	1-162-282-31	(EXCEPT WG)...CERAMIC 100PF 10% 50V
C113	1-130-480-00	MYLAR 0.0056MF 5% 50V
C114	1-130-473-00	MYLAR 0.0015MF 5% 50V
C115	1-124-902-00	ELECT 0.47MF 20% 50V
C116	1-124-472-11	ELECT 470MF 20% 10V
C117	1-136-157-00	(WG)...FILM 0.022MF 5% 50V
C150	1-124-925-11	(F310R)...ELECT 2.2MF 20% 50V
C201	1-162-286-31	(WG)...CERAMIC 220PF 10% 50V
C202	1-162-286-31	(WG)...CERAMIC 220PF 10% 50V
C203	1-162-286-31	(WG)...CERAMIC 220PF 10% 50V
C204	1-162-286-31	(WG)...CERAMIC 220PF 10% 50V
C205	1-162-286-31	(WG)...CERAMIC 220PF 10% 50V
C206	1-162-286-31	(WG)...CERAMIC 220PF 10% 50V
C207	1-162-286-31	(WG)...CERAMIC 220PF 10% 50V
C208	1-162-284-31	(WG)...CERAMIC 150PF 10% 50V
C208	1-162-285-31	(Canadian,AEP,UK,E) ...CERAMIC 180PF 10% 50V
C209	1-162-282-31	(WG)...CERAMIC 100PF 10% 50V
C210	1-123-875-11	ELECT 10MF 20% 50V
C211	1-124-477-11	ELECT 47MF 20% 16V
C212	1-162-284-31	(WG)...CERAMIC 150PF 10% 50V
C212	1-162-282-31	(Canadian,AEP,UK,E) ...CERAMIC 100PF 10% 50V
C213	1-130-480-00	MYLAR 0.0056MF 5% 50V
C214	1-130-473-00	MYLAR 0.0015MF 5% 50V
C215	1-124-902-00	ELECT 0.47MF 20% 50V
C216	1-124-472-11	ELECT 470MF 20% 10V
C217	1-136-157-00	(WG)...FILM 0.022MF 5% 50V
C301	1-130-481-00	MYLAR 0.0068MF 10% 50V
C302	1-130-021-00	MYLAR 0.0018MF 10% 50V
C303	1-136-159-00	FILM 0.033MF 5% 50V
C304	1-130-479-00	MYLAR 0.0047MF 10% 50V
C401	1-130-481-00	MYLAR 0.0068MF 10% 50V
C402	1-130-021-00	MYLAR 0.0018MF 10% 50V
C403	1-136-159-00	FILM 0.033MF 5% 50V
C404	1-130-479-00	MYLAR 0.0047MF 10% 50V
C500	1-124-927-11	ELECT 4.7MF 20% 50V
C501	1-124-927-11	ELECT 4.7MF 20% 50V
C502	1-124-478-11	ELECT 100MF 20% 25V
C503	1-101-804-00	CERAMIC 10PF 5% 500V
C504	1-136-163-00	FILM 0.068MF 5% 50V
C505	1-124-477-11	ELECT 47MF 20% 16V
C506	1-136-163-00	FILM 0.068MF 5% 50V
C507	1-136-163-00	FILM 0.068MF 5% 50V
C509	1-136-153-00	(WG)...FILM 0.01MF 5% 50V
C510	1-136-153-00	(WG)...FILM 0.01MF 5% 50V
C511	1-136-157-00	(WG)...FILM 0.022MF 5% 50V

Ref.No.	Part No.	Description			
C600	1-124-927-11	ELECT	4.7MF	20%	50V
C601	1-124-927-11	ELECT	4.7MF	20%	50V
C602	1-124-478-11	ELECT	100MF	20%	25V
C603	1-101-804-00	CERAMIC	10PF	5%	500V
C604	1-136-163-00	FILM	0.068MF	5%	50V
C605	1-124-477-11	ELECT	47MF	20%	16V
C606	1-136-163-00	FILM	0.068MF	5%	50V
C607	1-136-163-00	FILM	0.068MF	5%	50V
C609	1-136-153-00	(WG)...FILM	0.01MF	5%	50V
C610	1-136-153-00	(WG)...FILM	0.01MF	5%	50V
C611	1-136-157-00	(WG)...FILM	0.022MF	5%	50V
C700	1-162-284-31	CERAMIC	150PF	10%	50V
C701	1-162-284-31	CERAMIC	150PF	10%	50V
C702	1-164-097-11	CERAMIC	0.022MF		50V
C703	1-161-494-00	CERAMIC	0.022MF	30%	25V
C704	1-130-471-00	MYLAR	0.001MF	5%	50V
C706	1-136-157-00	FILM	0.022MF	5%	50V
C707	1-124-473-11	ELECT	1000MF	20%	10V
C708	1-164-097-11	CERAMIC	0.022MF		50V
C709	1-124-446-11	ELECT	47MF	20%	10V
C711	1-161-379-00	CERAMIC	0.01MF	20%	16V
C712	1-161-379-00	CERAMIC	0.01MF	20%	16V
C713	1-161-379-00	CERAMIC	0.01MF	20%	16V
C714	1-136-164-00	FILM	0.082MF	5%	50V
C715	1-136-164-00	(WG)...FILM	0.082MF	5%	50V
C716	1-124-768-11	ELECT	4.7MF	20%	50V
C750	1-123-875-11	ELECT	10MF	20%	50V
C751	1-123-875-11	ELECT	10MF	20%	50V
C752	1-136-159-00	FILM	0.033MF	5%	50V
C753	1-136-159-00	FILM	0.033MF	5%	50V
C754	1-136-159-00	FILM	0.033MF	5%	50V
C800	1-123-875-11	ELECT	10MF	20%	50V
C801	1-124-925-11	ELECT	2.2MF	20%	50V
C802	1-126-176-11	ELECT	220MF	20%	6.3V
C803	1-123-875-11	ELECT	10MF	20%	50V
C804	1-126-101-11	ELECT	100MF	20%	16V
C900	1-125-474-11	(E).....ELECT	8200MF	20%	56V
C900	1-125-536-11	(F410R:AEP,WG) ...ELECT	10000MF	20%	50V
C900	1-125-574-11	(Canadian,UK) ...ELECT	8200MF	20%	56V
C900	1-126-256-11	(F310R)...ELECT	4700MF	20%	35V
C901	1-125-474-11	(E).....ELECT	8200MF	20%	56V
C901	1-125-536-11	(F410R:AEP,WG) ...ELECT	10000MF	20%	50V
C901	1-125-574-11	(Canadian,UK) ...ELECT	8200MF	20%	56V
C901	1-126-256-11	(F310R)...ELECT	4700MF	20%	35V
C902	1-124-637-11	(F410R:AEP,WG) ...ELECT	1000MF	20%	50V
C902	1-124-921-11	(Canadian,UK,E) ...ELECT	470MF	20%	63V
C902	1-126-104-11	(F310R)...ELECT	470MF	20%	35V
C903	1-124-921-11	(Canadian,UK,E) ...ELECT	470MF	20%	63V
C903	1-124-637-11	(F410R:AEP,WG) ...ELECT	1000MF	20%	50V
C903	1-126-104-11	(F310R)...ELECT	470MF	20%	35V
C904	1-124-916-11	(Canadian,UK,E) ...ELECT	22MF	20%	63V
C904	1-126-233-11	(AEP,WG)..ELECT	22MF	20%	50V
C905	1-124-916-11	(Canadian,UK,E) ...ELECT	22MF	20%	63V
C905	1-126-233-11	(AEP,WG)..ELECT	22MF	20%	50V
C906	1-124-914-11	(Canadian,UK,E) ...ELECT	4.7MF	20%	63V
C906	1-126-233-11	(AEP,UK)..ELECT	22MF	20%	50V
C907	1-124-914-11	(Canadian,UK,E) ...ELECT	4.7MF	20%	63V
C907	1-126-233-11	(AEP,WG)..ELECT	22MF	20%	50V
C908	1-102-394-11	CERAMIC	0.01MF		250V
C909	1-102-394-11	CERAMIC	0.01MF		250V
C910	1-124-557-11	ELECT	1000MF	20%	25V
C911	1-124-557-11	ELECT	1000MF	20%	25V
C912	1-126-103-11	ELECT	470MF	20%	16V
C913	1-126-103-11	ELECT	470MF	20%	16V
C914	1-136-153-00	FILM	0.01MF	5%	50V
C915	1-124-480-11	ELECT	470MF	20%	25V
C916	1-123-875-11	ELECT	10MF	20%	50V
C917	1-124-927-11	(E)....ELECT	4.7MF	20%	50V
C920	1-136-157-00	(WG)...FILM	0.022MF	5%	50V
C950	1-124-499-11	ELECT	1MF	20%	50V
C951	1-136-175-00	(WG)...FILM	0.68MF	5%	50V
CNJ1	*1-526-751-11	(UK).....OUTLET, AC (AC OUTLET)			
CNJ1	*1-526-794-11	(AEP,WG)...OUTLET, AC (AC OUTLET)			
CNJ1	*1-540-042-11	(E).....OUTLET, AC (NONPOLAR)(3P) (AC OUTLET)			
CNJ1	*1-540-061-11	(Canadian)...OUTLET, AC (POLAR) (AC OUTLET)			
CNJ500	*1-564-338-00	PIN, CONNECTOR 4P			
CNJ700	*1-561-651-00	SOCKET, CONNECTOR 7P			
CNJ701	1-562-087-00	SOCKET, CONNECTOR 4P			
CNJ702	*1-568-648-11	SOCKET, CONNECTOR 15P			
CNJ703	1-568-646-11	SOCKET, CONNECTOR (PC BOARD)15P			
CNJ710	1-566-213-11	PIN, CONNECTOR 4P (CONTROL S OUT)			
CNJ900	*1-568-649-11	(F310R)...SOCKET, CONNECTOR 10P			
CNP500	*1-564-505-11	PLUG, CONNECTOR 2P			
CNP600	*1-564-505-11	PLUG, CONNECTOR 2P			
CNP700	*1-565-366-11	PIN, CONNECTOR (PC BOARD) 7P			
CNP701	1-568-739-11	PIN, CONNECTOR (PC BOARD) 4P			
CNP702	*1-568-647-11	PIN, CONNECTOR 15P			
CNP703	1-568-645-11	1IN, CONNECTOR (PC BOARD) 15P			
CNP704	*1-564-505-11	PLUG, CONNECTOR 2P			
CNP710	*1-564-339-00	PIN, CONNECTOR 5P			
CNP750	*1-564-505-11	PLUG, CONNECTOR 2P			
CNP900	*1-508-693-00	(F310R)...CONNECTOR PIN 5P			
CP1	⚠ 1-558-686-11	(Canadian)...CORD, POWER			
CP1	⚠ 1-551-188-XX	(E).....CORD, POWER			
CP1	⚠ 1-555-750-00	(AEP,WG).....CORD, POWER			
CP1	⚠ 1-556-035-00	(UK).....CORD, POWER			
D501	8-719-815-85	DIODE 1S1585			
D502	8-719-815-85	DIODE 1S1585			
D601	8-719-815-85	DIODE 1S1585			
D602	8-719-815-85	DIODE 1S1585			
D700	8-719-914-12	DIODE HZ4BLL			
D701	8-719-000-26	DIODE US1060M			
D702	8-719-200-77	DIODE 10E2N			
D703	8-719-200-77	DIODE 10E2N			
D704	8-719-303-00	DIODE SEL2510C (VOLUME)			
D705	8-719-000-26	DIODE US1060M			

Note:
The components identified by mark ⚠ or dotted line with mark ⚠ are critical for safety. Replace only with part number specified.

Note:
Les composants identifiés par une marque ⚠ sont critiques pour la sécurité. Ne les remplacer que par une pièce portant le numéro spécifié.

Ref.No.	Part No.	Description
D706	8-719-000-26	DIODE US1060M
D707	8-719-000-26	DIODE US1060M
D708	8-719-000-26	DIODE US1060M
D709	8-719-000-26	DIODE US1060M
D710	8-719-000-26	DIODE US1060M
D711	8-719-000-26	DIODE US1060M
D712	8-719-000-26	DIODE US1060M
D713	8-719-000-26	DIODE US1060M
D714	8-719-000-26	DIODE US1060M
D715	8-719-312-31	DIODE SEL1515C-CD (TAPE 2/DAT)
D716	8-719-312-31	DIODE SEL1515C-CD (TAPE)
D717	8-719-312-31	DIODE SEL1515C-CD (VIDEO/AUX)
D718	8-719-312-31	DIODE SEL1515C-CD (CD)
D719	8-719-312-31	DIODE SEL1515C-CD (TUNER)
D720	8-719-312-31	DIODE SEL1515C-CD (PHONO)
D721	8-719-933-33	DIODE HZS6A1L
D722	8-719-304-14	DIODE SEL2510W (SOURCE DIRECT)
D723	8-719-304-14	DIODE SEL2510W (SOURCE DIRECT)
D724	8-719-301-38	DIODE SEL2210S (STAND BY)
D725	8-719-000-26	DIODE US1060M
D750	8-719-000-26	DIODE US1060M
D751	8-719-000-26	(F410R)...DIODE US1060M
D752	8-719-000-26	(F410R)...DIODE US1060M
D753	8-719-000-26	(F410R)...DIODE US1060M
D754	8-719-000-26	(F410R)...DIODE US1060M
D755	8-719-000-26	(F410R)...DIODE US1060M
D756	8-719-000-26	DIODE US1060M
D757	8-719-200-77	DIODE 10E2N
D758	8-719-000-26	DIODE US1060M
D800	8-719-200-77	DIODE 10E2N
D801	8-719-000-26	DIODE US1060M
D802	8-719-000-26	DIODE US1060M
D900	8-719-302-38	(F410R)...DIODE RBV-602-01
D900	8-719-312-09	(F310R)...DIODE RBA-402
D901	8-719-200-77	DIODE 10E2N
D902	8-719-200-77	DIODE 10E2N
D903	8-719-200-77	DIODE 10E2N
D904	8-719-200-77	DIODE 10E2N
D905	8-719-200-77	DIODE 10E2N
D906	8-719-200-77	DIODE 10E2N
D907	8-719-200-77	DIODE 10E2N
D908	8-719-200-77	DIODE 10E2N
D909	8-719-511-40	DIODE S1VB40
D913	8-719-000-26	DIODE US1060M
D914	8-719-000-26	DIODE US1060M
F1 ⚠	1-532-203-11	(E).....FUSE, TIME-LAG T2.0A
F1 ⚠	1-532-285-11	(F310R)....FUSE, TIME-LAG T1.25A
F1 ⚠	1-532-286-11	(F410R:AEP,WG,UK) ...FUSE, TIME-LAG T2.5A
F1 ⚠	1-532-745-11	(Canadian)...FUSE, GLASS TUBE TSC3.15A
F2 ⚠	1-532-203-11	(E).....FUSE, TIME-LAG T2.0A
F2 ⚠	1-532-286-11	(AEP,WG,UK)...FUSE, TIME-LAG T2.5A
IC101	8-759-600-02	IC M5218L
IC102	8-759-800-37	(F310R)...IC LC4066BH
IC501	8-759-109-06	IC UPC1298V

Ref.No.	Part No.	Description
IC601	8-759-109-06	IC UPC1298V
IC700	8-759-632-61	IC M50761-258P
IC701	8-759-802-52	IC LC7818
IC702	8-749-920-83	IC GP1U52XB
IC800	8-759-111-68	IC UPC1237HA
IC900	8-759-604-29	IC M5F7805
IC901	8-759-982-10	IC RC7809FA
IC902	8-759-604-49	IC M5F7909
IC950	8-759-604-33	(E)...IC M5F7812
J100	1-565-320-11	JACK, PIN 6P (PHONO,TUNER,CD)
J101	1-565-320-11	JACK, PIN 6P (VIDEO/AUX,TAPE 1)
J102	1-568-529-21	JACK, PIN 4P (TAPE 2/DAT)
J900	1-507-863-51	JACK, LARGE TYPE
L500	*1-420-872-00	COIL, AIR CORE 1.8UH
L600	*1-420-872-00	COIL, AIR CORE 1.8UH
Q101	8-729-900-63	(F310R)...TRANSISTOR DTA124ES
Q102	8-729-806-34	(F310R)...TRANSISTOR 2SC3400
Q500	8-729-107-98	TRANSISTOR 2SC3622AL
Q501	8-729-119-78	TRANSISTOR 2SC2785HFE
Q502	8-729-321-55	TRANSISTOR 2SC4386-OPY-LF
Q503	8-729-321-56	TRANSISTOR 2SA1671-OPY-LF
Q504	8-729-108-05	TRANSISTOR 2SC1841PA
Q600	8-729-107-98	TRANSISTOR 2SC3622AL
Q601	8-729-119-78	TRANSISTOR 2SC2785HFE
Q602	8-729-321-55	TRANSISTOR 2SC4386-OPY-LF
Q603	8-729-321-56	TRANSISTOR 2SA1671-OPY-LF
Q604	8-729-108-05	TRANSISTOR 2SC1841PA
Q700	8-729-119-78	TRANSISTOR 2SC2785HFE
Q701	8-729-119-78	TRANSISTOR 2SC2785HFE
Q702	8-729-119-78	TRANSISTOR 2SC2785HFE
Q703	8-729-119-78	TRANSISTOR 2SC2785HFE
Q704	8-729-900-63	TRANSISTOR DTA124ES
Q705	8-729-119-78	TRANSISTOR 2SC2785HFE
Q706	8-729-119-78	TRANSISTOR 2SC2785HFE
Q707	8-729-900-63	TRANSISTOR DTA124ES
Q708	8-729-900-63	TRANSISTOR DTA124ES
Q709	8-729-900-63	TRANSISTOR DTA124ES
Q710	8-729-900-63	(F410R)...TRANSISTOR DTA124ES
Q711	8-729-900-63	(F410R)...TRANSISTOR DTA124ES
Q712	8-729-900-63	TRANSISTOR DTA124ES
Q713	8-729-900-63	TRANSISTOR DTA124ES
Q714	8-729-806-34	TRANSISTOR 2SC3400
Q715	8-729-111-29	TRANSISTOR 2SD1388
Q716	8-729-802-22	TRANSISTOR 2SB1014
Q717	8-729-119-76	TRANSISTOR 2SA1175HFE
Q750	8-729-900-63	TRANSISTOR DTA124ES
Q751	8-729-900-63	TRANSISTOR DTA124ES
Q800	8-729-900-63	TRANSISTOR DTA124ES
Q900	8-729-808-76	TRANSISTOR 2SD1761E
Q901	8-729-920-91	TRANSISTOR 2SB1187F
R101	1-249-409-11	(WG)...CARBON 220 5% 1/4W
R102	1-249-417-11	CARBON 1K 5% 1/4W
R103	1-249-409-11	(WG)...CARBON 220 5% 1/4W
R104	1-249-417-11	CARBON 1K 5% 1/4W
R105	1-249-409-11	(WG)...CARBON 220 5% 1/4W
R106	1-249-409-11	(WG)...CARBON 220 5% 1/4W

Note:
The components identified by mark ⚠ or dotted line with mark ⚠ are critical for safety. Replace only with part number specified.

Note:
Les composants identifiés par une marque ⚠ sont critiques pour la sécurité.
Ne les remplacer que par une pièce portant le numéro spécifié.

Ref.No.	Part No.	Description
R107	1-249-409-11	(WG)...CARBON 220 5% 1/4W
R108	1-249-418-11	CARBON 1.2K 5% 1/4W
R109	1-249-441-11	CARBON 100K 5% 1/4W
R110	1-249-418-11	(WG)...CARBON 1.2K 5% 1/4W
R111	1-249-441-11	CARBON 100K 5% 1/4W
R112	1-249-416-11	CARBON 820 5% 1/4W
R113	1-247-897-11	CARBON 560K 5% 1/4W
R114	1-249-437-11	CARBON 47K 5% 1/4W
R115	1-249-441-11	CARBON 100K 5% 1/4W
R116	1-249-409-11	CARBON 220 5% 1/4W
R117	1-249-405-11	CARBON 100 5% 1/4W
R118	1-249-405-11	CARBON 100 5% 1/4W
R119	1-249-405-11	(F310R)...CARBON 22K 5% 1/4W
R120	1-249-405-11	(F310R)...CARBON 22K 5% 1/4W
R150	1-249-441-11	(F310R)...CARBON 100K 5% 1/4W
R201	1-249-409-11	(WG)...CARBON 220 5% 1/4W
R202	1-249-417-11	CARBON 1K 5% 1/4W
R203	1-249-409-11	(WG)...CARBON 220 5% 1/4W
R204	1-249-417-11	CARBON 1K 5% 1/4W
R205	1-249-409-11	(WG)...CARBON 220 5% 1/4W
R206	1-249-409-11	(WG)...CARBON 220 5% 1/4W
R207	1-249-409-11	(WG)...CARBON 220 5% 1/4W
R208	1-249-418-11	CARBON 1.2K 5% 1/4W
R209	1-249-441-11	CARBON 100K 5% 1/4W
R210	1-249-418-11	(WG)...CARBON 1.2K 5% 1/4W
R211	1-249-441-11	CARBON 100K 5% 1/4W
R212	1-249-416-11	CARBON 820 5% 1/4W
R213	1-247-897-11	CARBON 560K 5% 1/4W
R214	1-249-437-11	CARBON 47K 5% 1/4W
R215	1-249-441-11	CARBON 100K 5% 1/4W
R216	1-249-409-11	CARBON 220 5% 1/4W
R217	1-249-405-11	CARBON 100 5% 1/4W
R218	1-249-405-11	CARBON 100 5% 1/4W
R301	1-247-903-00	CARBON 1M 5% 1/4W
R302	1-249-421-11	CARBON 2.2K 5% 1/4W
R303	1-249-426-11	CARBON 5.6K 5% 1/4W
R304	1-247-903-00	CARBON 1M 5% 1/4W
R305	1-247-852-11	CARBON 7.5K 5% 1/4W
R306	1-247-870-11	CARBON 43K 5% 1/4W
R307	1-249-436-11	CARBON 39K 5% 1/4W
R308	1-249-437-11	CARBON 47K 5% 1/4W
R401	1-247-903-00	CARBON 1M 5% 1/4W
R402	1-249-421-11	CARBON 2.2K 5% 1/4W
R403	1-249-426-11	CARBON 5.6K 5% 1/4W
R404	1-247-903-00	CARBON 1M 5% 1/4W
R405	1-247-852-11	CARBON 7.5K 5% 1/4W
R406	1-247-870-11	CARBON 43K 5% 1/4W
R407	1-249-436-11	CARBON 39K 5% 1/4W
R408	1-249-437-11	CARBON 47K 5% 1/4W
R500	1-249-417-11	CARBON 1K 5% 1/4W
R501	1-249-417-11	CARBON 1K 5% 1/4W
R502	1-249-423-11	CARBON 3.3K 5% 1/4W
R503	1-249-441-11	CARBON 100K 5% 1/4W
R504	1-247-711-11	(UK,E).....CARBON 680 5% 1/4W
R504 ⚠	1-249-415-11	(Canadian)...CARBON 680 5% 1/4W F
R504	1-249-416-11	(F410R:AEP,WG)...CARBON 820 5% 1/4W
R504	1-249-418-11	(F310R).....CARBON 1.2K 5% 1/4W

Note:
The components identified by mark ⚠ or dotted line with mark ⚠ are critical for safety. Replace only with part number specified.

Note:
Les composants identifiés par une marque ⚠ sont critiques pour la sécurité. Ne les remplacer que par une pièce portant le numéro spécifié.

Ref.No.	Part No.	Description
R505	1-249-441-11	CARBON 100K 5% 1/4W
R506	1-249-431-11	CARBON 15K 5% 1/4W
R507	1-249-419-11	CARBON 1.5K 5% 1/4W
R508	1-249-423-11	CARBON 3.3K 5% 1/4W
R509 ⚠	1-247-688-11	CARBON 10 5% 1/4W F
R510 ⚠	1-247-688-11	CARBON 10 5% 1/4W F
R511 ⚠	1-216-361-00	METAL OXIDE 0.22 5% 2W F
R512 ⚠	1-216-361-00	METAL OXIDE 0.22 5% 2W F
R513	1-247-871-11	(Canadian,UK,E) ...CARBON 47K 5% 1/4W
R513	1-249-423-11	(F310R)...CARBON 3.3K 5% 1/4W
R513	1-249-430-11	(F410R:AEP,WG) ...CARBON 12K 5% 1/4W
R514	1-247-727-11	CARBON 10 5% 1/2W
R515	1-249-437-11	CARBON 47K 5% 1/4W
R516	1-247-727-11	CARBON 10 5% 1/2W
R517	1-247-727-11	(WG)...CARBON 10 5% 1/2W
R518	1-247-727-11	(WG)...CARBON 10 5% 1/2W
R519	1-247-704-11	CARBON 220 5% 1/4W F
R520	1-215-867-11	(Canadian,UK,E) ...METAL OXIDE 470 5% 1W F
R520	1-216-430-11	(AEP,WG)...METAL OXIDE 390 5% 1W F
R521	1-216-361-00	(F410R)....METAL OXIDE 0.22 5% 2W F
R522	1-216-361-00	(F410R)....METAL OXIDE 0.22 5% 2W F
R523	1-249-423-11	CARBON 3.3K 5% 1/4W
R600	1-249-417-11	CARBON 1K 5% 1/4W
R601	1-249-417-11	CARBON 1K 5% 1/4W
R602	1-249-423-11	CARBON 3.3K 5% 1/4W
R603	1-249-441-11	CARBON 100K 5% 1/4W
R604	1-247-711-11	(UK,E).....CARBON 680 5% 1/4W
R604	1-249-416-11	(F410R:AEP,UK)...CARBON 820 5% 1/4W
R604	1-249-418-11	(F310R).....CARBON 1.2K 5% 1/4W
R604 ⚠	1-249-415-11	(Canadian)...CARBON 680 5% 1/4W F
R605	1-249-441-11	CARBON 100K 5% 1/4W
R606	1-249-431-11	CARBON 15K 5% 1/4W
R607	1-249-419-11	CARBON 1.5K 5% 1/4W
R608	1-249-423-11	CARBON 3.3K 5% 1/4W
R609 ⚠	1-247-688-11	CARBON 10 5% 1/4W F
R610 ⚠	1-247-688-11	CARBON 10 5% 1/4W F
R611 ⚠	1-216-361-00	METAL OXIDE 0.22 5% 2W F
R612 ⚠	1-216-361-00	METAL OXIDE 0.22 5% 2W F
R613	1-249-430-11	(F410R:AEP,WG) ...CARBON 12K 5% 1/4W
R613	1-247-871-11	(Canadian,UK,E) ...CARBON 47K 5% 1/4W
R613	1-249-423-11	(F310R)...CARBON 3.3K 5% 1/4W
R614	1-247-727-11	CARBON 10 5% 1/2W
R615	1-249-438-11	CARBON 56K 5% 1/4W
R616	1-247-727-11	CARBON 10 5% 1/2W
R617	1-247-727-11	(WG)...CARBON 10 5% 1/2W
R618	1-247-727-11	(WG)...CARBON 10 5% 1/2W
R619 ⚠	1-247-704-11	CARBON 220 5% 1/4W F
R620 ⚠	1-215-867-11	(Canadian,UK,E) ...METAL OXIDE 470 5% 1W F
R620 ⚠	1-216-430-11	(AEP,WG)...METAL OXIDE 390 5% 1W F
R621 ⚠	1-216-361-00	(F410R)...METAL OXIDE 0.22 5% 2W F
R622 ⚠	1-216-361-00	(F410R)...METAL OXIDE 0.22 5% 2W F
R623	1-249-423-11	CARBON 3.3K 5% 1/4W
R700	1-249-423-11	CARBON 3.3K 5% 1/4W
R701	1-247-903-00	CARBON 1M 5% 1/4W
R702	1-249-417-11	CARBON 1K 5% 1/4W

Ref.No.	Part No.	Description
R703	1-249-441-11	CARBON 100K 5% 1/4W
R704	1-249-433-11	CARBON 22K 5% 1/4W
R705	1-249-429-11	CARBON 10K 5% 1/4W
R706	1-249-441-11	CARBON 100K 5% 1/4W
R707	1-249-433-11	CARBON 22K 5% 1/4W
R708	1-249-417-11	CARBON 1K 5% 1/4W
R709	1-249-393-11	CARBON 10 5% 1/4W
R710	1-249-429-11	CARBON 10K 5% 1/4W
R711	1-249-417-11	CARBON 1K 5% 1/4W
R712	1-249-429-11	CARBON 10K 5% 1/4W
R713	1-249-429-11	CARBON 10K 5% 1/4W
R714	1-249-433-11	CARBON 22K 5% 1/4W
R715	1-249-433-11	CARBON 22K 5% 1/4W
R716	1-249-433-11	CARBON 22K 5% 1/4W
R717	1-249-433-11	CARBON 22K 5% 1/4W
R718	1-249-433-11	CARBON 22K 5% 1/4W
R719	1-249-433-11	CARBON 22K 5% 1/4W
R720	1-249-433-11	CARBON 22K 5% 1/4W
R721	1-249-433-11	CARBON 22K 5% 1/4W
R722	1-249-411-11	CARBON 330 5% 1/4W
R723	1-249-411-11	CARBON 330 5% 1/4W
R724	1-249-411-11	CARBON 330 5% 1/4W
R725	1-249-411-11	CARBON 330 5% 1/4W
R726	1-249-411-11	CARBON 330 5% 1/4W
R727	1-249-411-11	CARBON 330 5% 1/4W
R728	1-249-429-11	CARBON 10K 5% 1/4W
R729	1-249-429-11	CARBON 10K 5% 1/4W
R731	1-247-901-11	CARBON 820K 5% 1/4W
R732	1-249-433-11	CARBON 22K 5% 1/4W
R733	1-249-433-11	CARBON 22K 5% 1/4W
R734	1-249-441-11	CARBON 100K 5% 1/4W
R735	1-249-410-11	CARBON 270 5% 1/4W
R736	1-249-416-11	CARBON 820 5% 1/4W
R737	1-249-419-11	CARBON 1.5K 5% 1/4W
R739	1-249-423-11	CARBON 3.3K 5% 1/4W
R740	1-249-441-11	CARBON 100K 5% 1/4W
R742	1-249-423-11	CARBON 3.3K 5% 1/4W
R743	1-249-409-11	CARBON 220 5% 1/4W
R744	1-249-412-11	CARBON 390 5% 1/4W
R745 ⚠	1-249-394-11	CARBON 12 5% 1/4W F
R746 ⚠	1-249-394-11	CARBON 12 5% 1/4W F
R747	1-249-433-11	(F410R)...CARBON 22K 5% 1/4W
R750	1-249-433-11	CARBON 22K 5% 1/4W
R800	1-249-439-11	CARBON 68K 5% 1/4W
R801	1-249-430-11	(F410R:AEP,WG) ...CARBON 12K 5% 1/4W
R801	1-247-861-11	(Canadian,UK,E) ...CARBON 18K 5% 1/4W
R801	1-249-429-11	(F310R)..CARBON 10K 5% 1/4W
R802	1-249-441-11	CARBON 100K 5% 1/4W
R803	1-249-440-11	CARBON 82K 5% 1/4W
R805 ⚠	1-215-890-11	(F410R:AEP,WG) ...METAL OXIDE 470 5% 2W F
R805 ⚠	1-215-891-11	(Canadian,UK,E) ...METAL OXIDE 680 5% 2W F
R805 ⚠	1-216-428-11	(F310R)...METAL OXIDE 180 5% 1W F

Ref.No.	Part No.	Description
R806	1-247-851-11	(F310R)...CARBON 6.8K 5% 1/4W
R806	1-249-429-11	(F410R:AEP,WG) ...CARBON 10K 5% 1/4W
R806	1-249-430-11	(Canadian,UK,E) ...CARBON 12K 5% 1/4W
R900 ⚠	1-249-455-11	CARBON 4.7 5% 1/4W F
R901 ⚠	1-249-455-11	CARBON 4.7 5% 1/4W F
R902 ⚠	1-212-942-00	(F310R)...FUSIBLE 2.2 5% 1/2W F
R902 ⚠	1-217-473-00	(F410R)...FUSIBLE 2.2 5% 1W F
R903 ⚠	1-212-942-00	(F310R)...FUSIBLE 2.2 5% 1/2W F
R903 ⚠	1-217-473-00	(F410R)...FUSIBLE 2.2 5% 1W F
R904	1-249-417-11	CARBON 1K 5% 1/4W
R905	1-249-417-11	CARBON 1K 5% 1/4W
R906	1-246-447-11	(UK).....CARBON 82 5% 1/4W
R906	1-247-688-11	(Canadian)...CARBON 10 5% 1/4W
R906	1-247-698-11	(AEP,WG).....CARBON 68 5% 1/4W
R951	1-247-733-11	(WG).....CARBON 33 5% 1/2W
RV300	1-238-638-11	RES, VAR, CARBON 150K/150K (BALANCE)
RV301	1-238-639-11	RES, VAR 250K/250K (TREBLE)
RV302	1-238-640-11	RES, VAR, CARBON 520K/520K (BASS)
RV303	1-238-628-11	RES, VAR, CARBON (MOTOR)120KX2(VOLUME)
RV500	1-237-455-11	RES, ADJ, CARBON 500
RV600	1-237-455-11	RES, ADJ, CARBON 500
RY1	1-515-516-00	(AEP,WG,UK)...RELAY
RY1	1-515-617-11	(E).....RELAY
RY1	1-515-701-11	(Canadian)....RELAY
RY800	1-515-501-00	(F410R)...RELAY
RY800	1-515-533-11	(F310R)...RELAY
S1	1-571-515-11	(E)...SWITCH, POWER VOLTAGE SELECTION (VOLTAGE SELECTOR)
SW100-A	1-571-972-11	(F410R)...SWITCH, ROTARY
SW100-B	1-571-115-11	(F410R)...SWITCH, SLIDE (REC OUT SELECTOR)
SW301	1-571-828-11	SWITCH, PUSH (1 KEY)(SOURCE DIRECT)
SW700	1-554-303-21	SWITCH, KEY BOARD (PHONO)
SW701	1-554-303-21	SWITCH, KEY BOARD (TUNER)
SW702	1-554-303-21	SWITCH, KEY BOARD (CD)
SW703	1-554-303-21	SWITCH, KEY BOARD (VIDEO/AUX)
SW704	1-554-303-21	SWITCH, KEY BOARD (TAPE 1)
SW705	1-554-303-21	SWITCH, KEY BOARD (TAPE 2/DAT)
SW706	1-554-303-21	SWITCH, KEY BOARD (SYSTEM POWER)
SW900	1-571-973-11	(F410R)...SWITCH, ROTARY (SPEAKER)
SW900	1-571-971-11	(F310R)...SWITCH, PUSH (2 KEY)(SPEAKER)
T1 ⚠	1-449-743-11	(F310R).....TRANSFORMER, POWER
T1 ⚠	1-449-744-11	(F410R:AEP,WG)...TRANSFORMER, POWER
T1 ⚠	1-449-745-11	(Canadian).....TRANSFORMER, POWER
T1 ⚠	1-449-746-11	(UK).....TRANSFORMER, POWER
T1 ⚠	1-449-747-11	(E).....TRANSFORMER, POWER
T2 ⚠	1-449-296-11	(Canadian)....TRANSFORMER, POWER
T2 ⚠	1-449-297-11	(AEP,WG,UK)...TRANSFORMER, POWER
T2 ⚠	1-449-299-11	(E).....TRANSFORMER, POWER

Note:	Note:
The components identified by mark ⚠ or dotted line with mark ⚠ are critical for safety. Replace only with part number specified.	Les composants identifiés par une marque ⚠ sont critiques pour la sécurité. Ne les remplacer que par une pièce portant le numéro spécifié.

Ref.No.	Part No.	Description
TM900	1-537-227-11	(AEP).....TERMINAL BOARD (SP)
TM900	1-537-228-11	(Canadian,WG,UK,E)..TERMINAL BOARD (SP)
TP500	*1-535-115-00	TERMINAL
TP600	*1-535-115-00	TERMINAL
X700	1-577-077-11	OSCILLATOR, CERAMIC 400K

ACCESSORY & PACKING MATERIAL

	1-465-199-11	REMOTE COMMANDER (RM-S310)
	2-128-529-01	COVER BATTERY
⚠	1-526-565-00	(E)...AC PLUG ADAPTOR
	3-750-604-11	(AEP,UK,E)...MANUAL, INSTRUCTION
	3-750-604-41	(AEP,WG).....MANUAL, INSTRUCTION
	*4-929-260-01	CUSHION
	*4-931-908-01	(F310R).....INDIVIDUAL CARTON
	*4-931-909-01	(F410R:AEP,WG,UK,E)...INDIVIDUAL CARTON

Note: The components identified by mark ⚠ or dotted line with mark ⚠ are critical for safety. Replace only with part number specified.	**Note:** Les composants identifiés par une marque ⚠ sont critiques pour la sécurité. Ne les remplacer que par une pièce portant le numéro spécifié.

9-953-826-12
(Including 9-953-826-91)

Sony Corporation
Audio Group

English
91E0505-1 (2)
Printed in Japan

Published by Customer Relations and Service Group

PRINTING THE SERVICE MANUAL

The PDF of this service manual is not designed to be printed from cover to cover. The pages vary in size, and must therefore be printed in sections based on page dimensions.

NON-SCHEMATIC PAGES

Data that does NOT INCLUDE schematic diagrams are formatted to 8.5 x 11 inches and can be printed on standard letter-size and/or A4-sized paper.

SCHEMATIC DIAGRAMS

The schematic diagram pages are provided in two ways, full size and tiled. The full-sized schematic diagrams are formatted on paper sizes between 8.5" x 11" and 18" x 30" depending upon each individual diagram size. Those diagrams that are LARGER than 11" x 17" in full-size mode have been tiled for your convience and can be printed on standard 11" x 17" (tabloid-size) paper, and reassembled.

TO PRINT FULL SIZE SCHEMATIC DIAGRAMS

If you have access to a large paper plotter or printer capable of outputting the full-sized diagrams, output as follows:

1) Note the page size(s) of the schematics you want to output as indicated in the middle window at the bottom of the viewing screen.

2) Go to the File menu and select Print Set-up. Choose the printer name and driver for your large format printer. Confirm that the printer settings are set to output the indicated page size or larger.

3) Close the Print Set Up screen and return to the File menu. Select "Print..." Input the page number of the schematic(s) you want to print in the print range window. Choose OK.

TO PRINT TILED VERSION OF SCHEMATICS

Schematic pages that are larger than 11" x 17" full-size are provided in a 11" x 17" printable tiled format near the end of the document. These can be printed to tabloid-sized paper and assembled to full-size for easy viewing.

If you have access to a printer capable of outputting the tabloid size (11" x 17") paper, then output the tiled version of the diagram as follows:

1) Note the page number(s) of the schematics you want to output as indicated in the middle window at the bottom of the viewing screen.

2) Go to the File menu and select Print Set-up. Choose the printer name and driver for your printer. Confirm that the plotter settings are set to output 11" x 17", or tabloid size paper in landscape (▭) mode.

3) Close the Print Set Up screen and return to the File menu. Select "Print..." Input the page number of the schematic(s) you want to print in the print range window. Choose OK.

TO PRINT SPECIFIC SECTIONS OF A SCHEMATIC

To print just a particular section of a PDF, rather than a full page, access the Graphics Select tool in the Acrobat Reader tool bar.

1) To view the Graphics Select Tool, press and HOLD the mouse button over the Text Select Tool which looks like: T
This tool will expand to reveal to additional tools.
Choose the Graphics Select tool by placing the cursor over the button on of the far right that looks like:

2) After selecting the Graphics Select Tool, place your cursor in the document window and the cursor will change to a plus (+) symbol. Click and drag the cursor over the area you want to print. When you release the mouse button, a marquee (or dotted lined box) will be displayed outlining the area you selected.

3) With the marquee in place, go to the file menu and select the "Print..." option. When the print window appears, choose the option under the section called "Print Range" which says "Selected Graphic".

Select OK and the output will print only the area that you outlined with the marquee.

(continued >)