Ned. Ver. v. Historie v/d R

AKAI

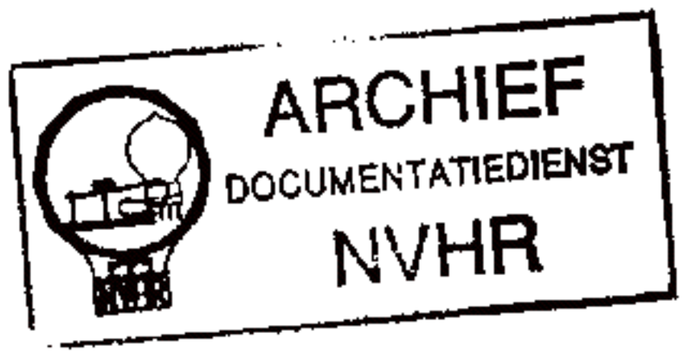

MODEL AM-A305/A505

SCHEMATIC DIAGRAM AND PC BOARDS

TABLE OF CONTENTS

1. LED PCB, TERMINAL PCB, AND VOLUME PCB 1
2. EQ PCB, FUNCTION PCB, MAIN PCB, AND POWER PCB 2
3. SCHEMATIC DIAGRAM 3
4. BLOCK DIAGRAM 4

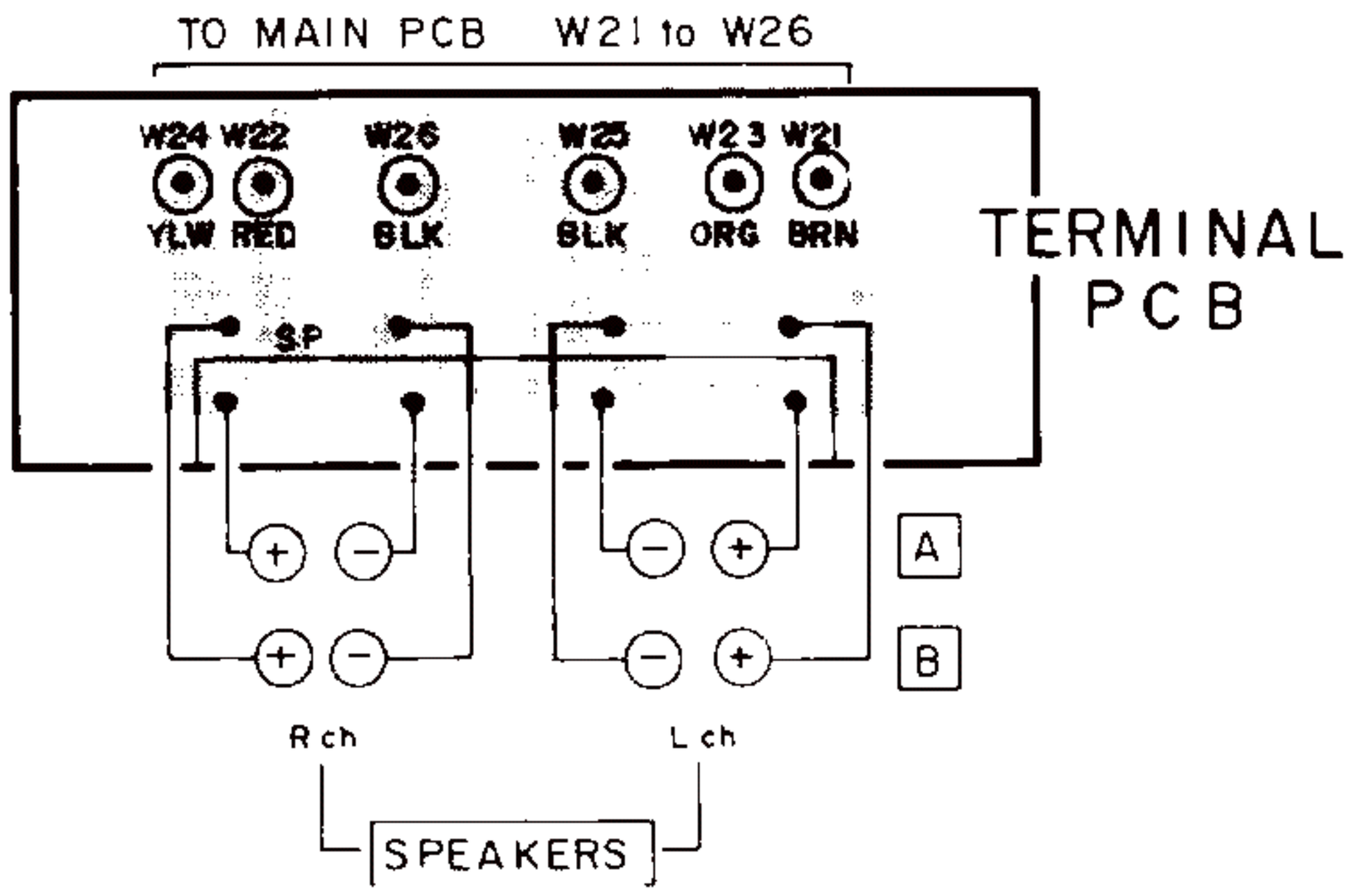

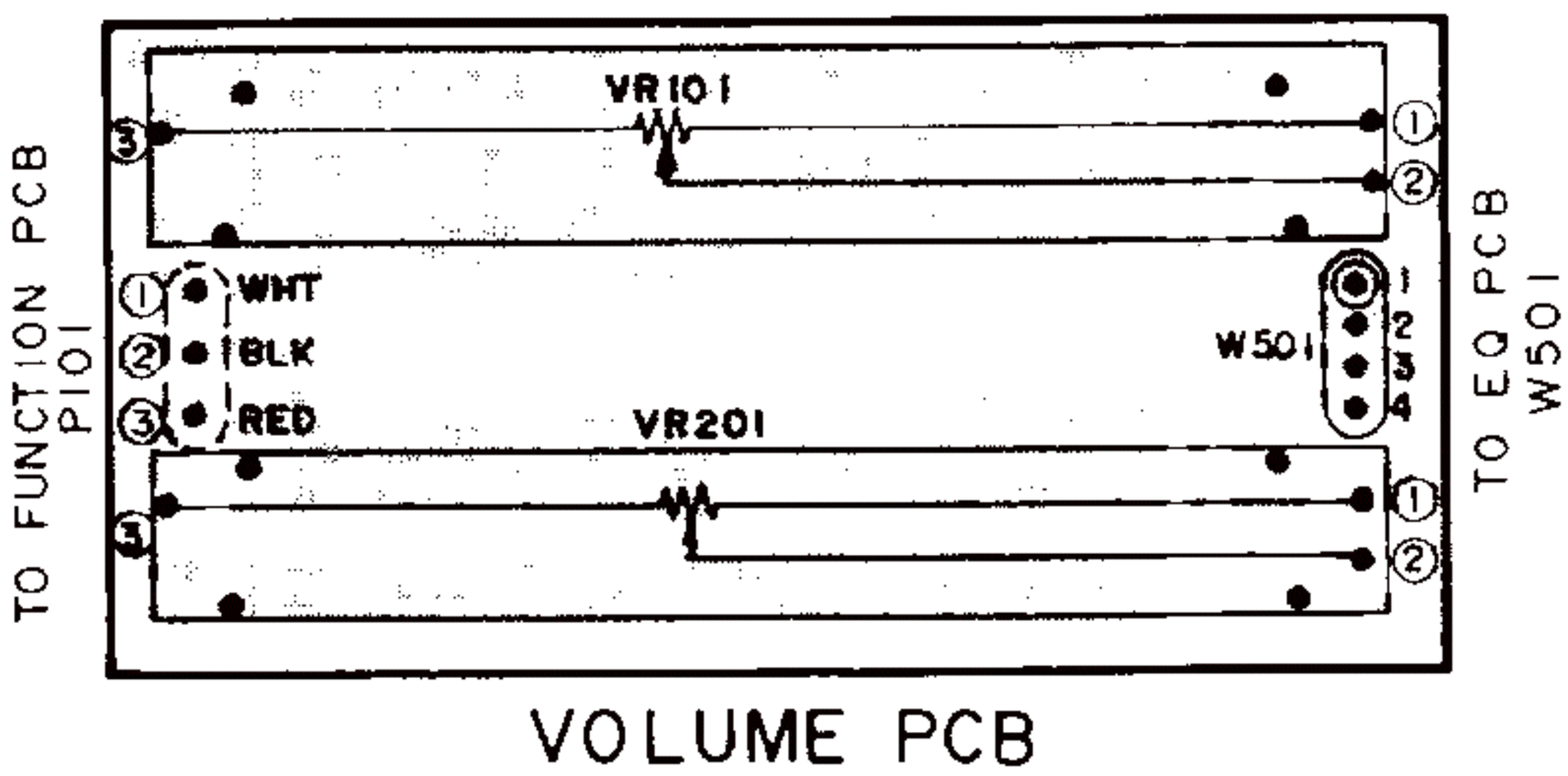

VOLUME PCB

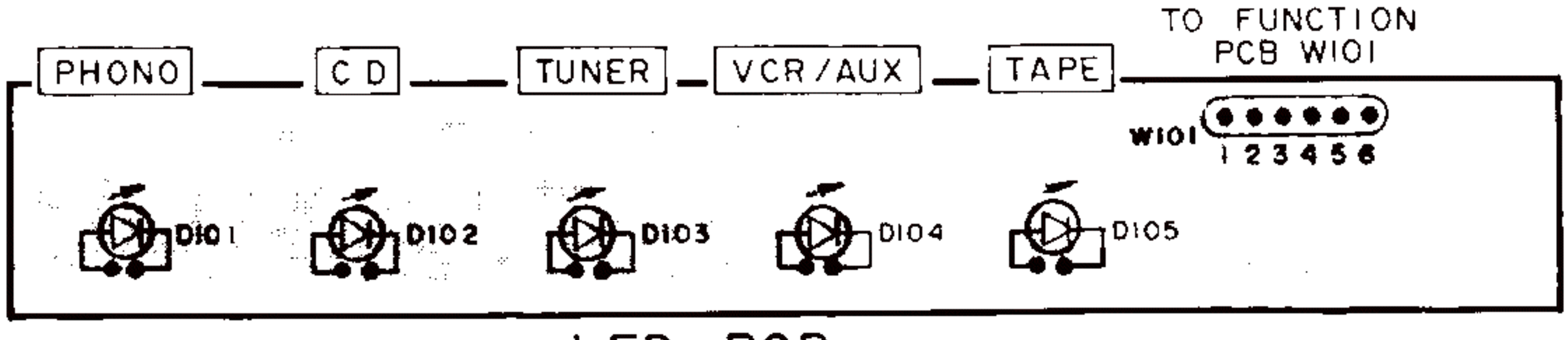

LED PCB

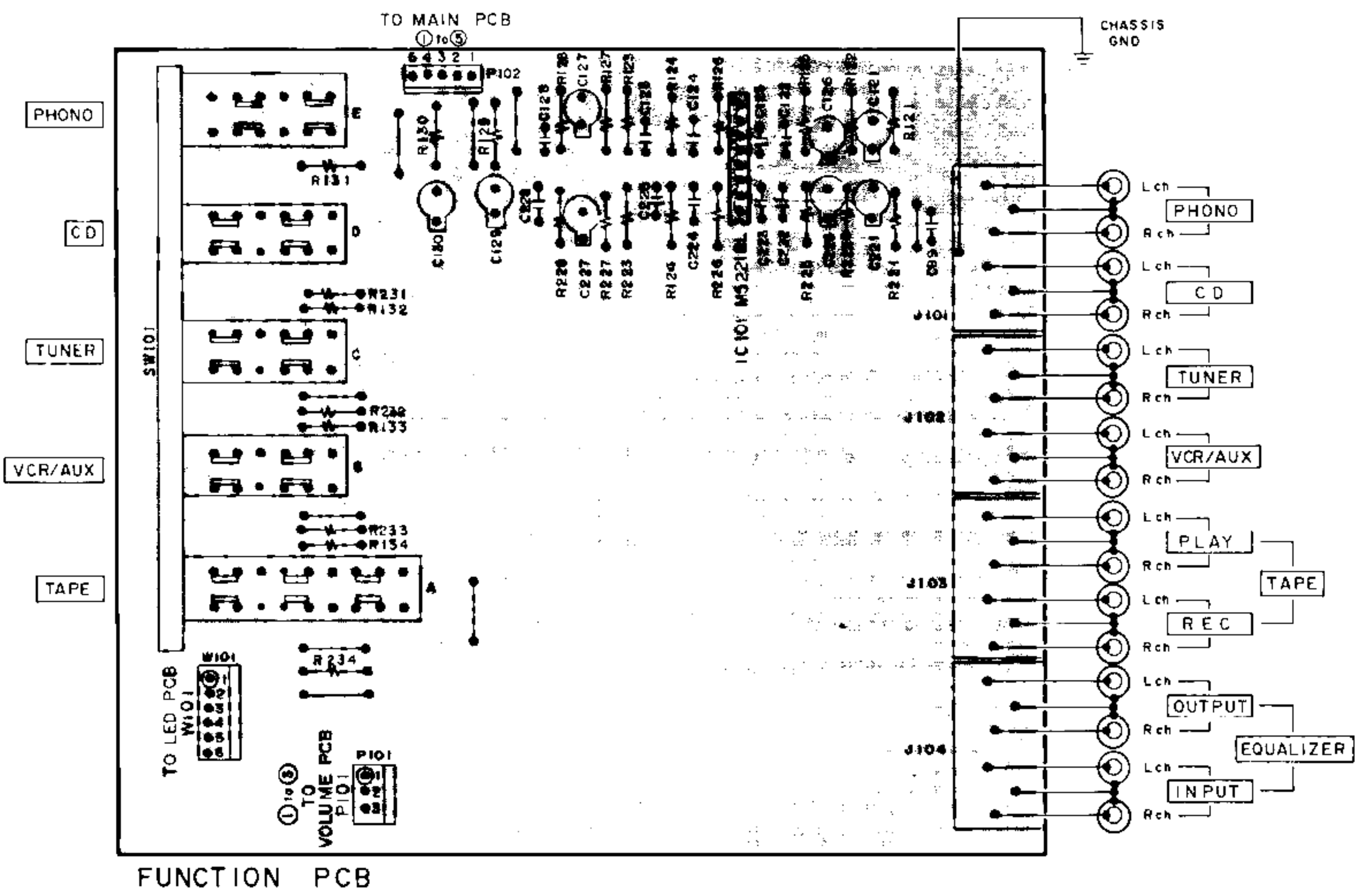
TO MAIN PCB
① to ⑤
P102
CHASSIS GND
PHONO
CD
TUNER
VCR/AUX
TAPE
SW101
IC101 M5221L
J101
J102
J103
J104
Lch
Rch
PHONO
CD
TUNER
VCR/AUX
PLAY
REC
TAPE
OUTPUT
INPUT
EQUALIZER
W101
TO LED PCB W101
TO VOLUME PCB P101
P101
FUNCTION PCB
TO MAIN PCB P501
P501
IC501 M5218L
W501
TO VOLUME PCB W501
E.Q PCB
TREBLE
VR601
BASS
VR501
SW502
SW501
HIGH
LOW
FILTER
TO MAIN PCB P301
P301

POWER SW PCB

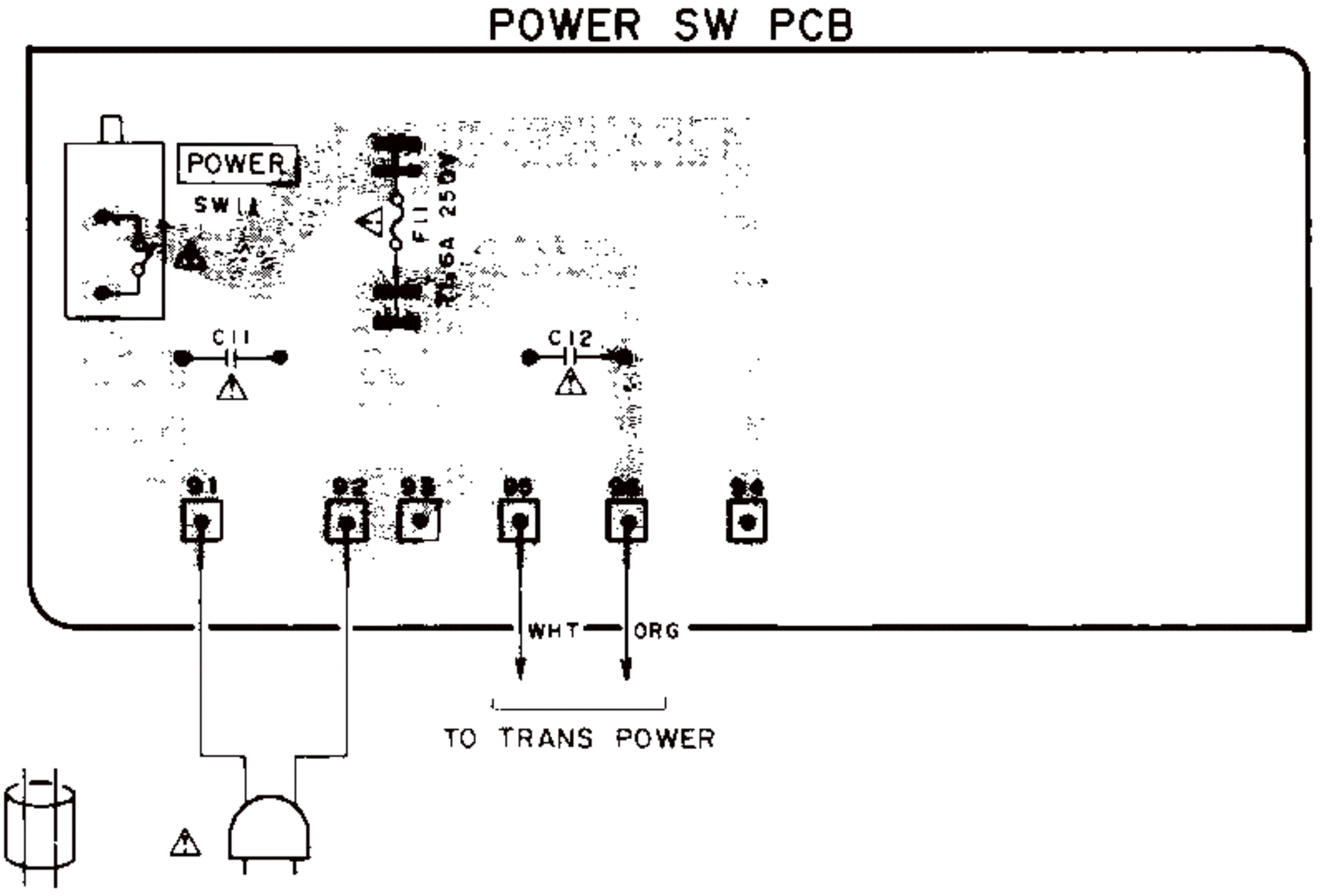

[R] AC240V 50Hz

[E] AC220V 50Hz

[S] AC240V 50Hz

WARNING ⚠ INDICATES SAFETY CRITICAL COMPONENTS. FOR CONTINUED SAFETY, REPLACE SAFETY CRITICAL COMPONENTS ONLY WITH MANUFACTURER'S RECOMMENDED PARTS

AVERTISSEMENT ⚠ IL INDIQUE LES COMPOSANTS CRITIQUES DE SECURITE POUR MAINTENIR LE DEGRE DE SECURITE DE L'APPAREIL NE REMPLACER QUE DES PIECES RECOMMANDEES PAR LE FABRICANT

MAIN PCB

IC401 AM-A305 : STK4028II AM-A505 : STK4036II

IC301 AM-A305 : STK4028II AM-A505 : STK4036II

TO EQ PCB P301

TO EQ PCB P501

TO FUNCTION PCB P102

TO TERMINAL PCB

TO TRANS POWER

TO TERMINAL PCB

SPEAKER SW

HEAD PHONES

#	R804	R51	C45	C46	F11	R591	R491
AM-A305	1/2W 470	1/2W 220	4700/40	4700/40	T800mA 250V	1W 330	1W 330
AM-A505	1W 680	1W 390	6800/50	6800/50	T1.6A 250V	1W 390	1W 390

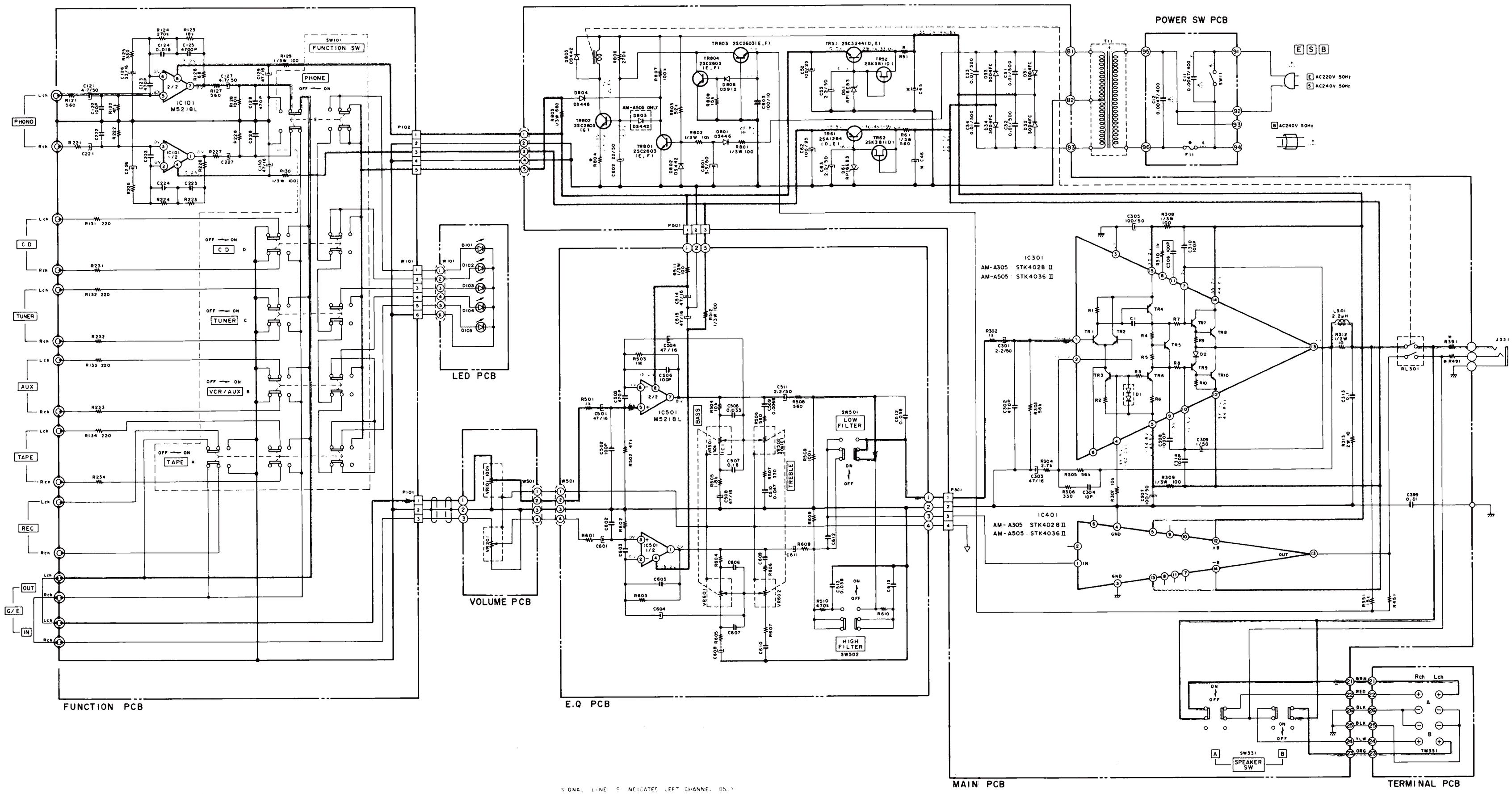

B(POWER SUPPLY) LINE

SIGNAL LINE

SIGNAL LINE S INDICATES LEFT CHANNEL ONLY.
VOLTAGE MEASURED OF MODEL AM-A505
INDICATED IN OF MODEL AM-A505

NOTE 1) A PART OF Rch CIRCUIT AND THE NUMERICAL VALUE ARE OMMITTED.
2) UNLESS OTHERWISE SPECIFIED ALL RESISTORS IN OHMS 1/4W(J)
3) ALL CAPACITORS IN μF 50WV(J)

AM-A305/A505 SCHEMATIC DIAGRAM

No. 870611A

AM-A305/A505

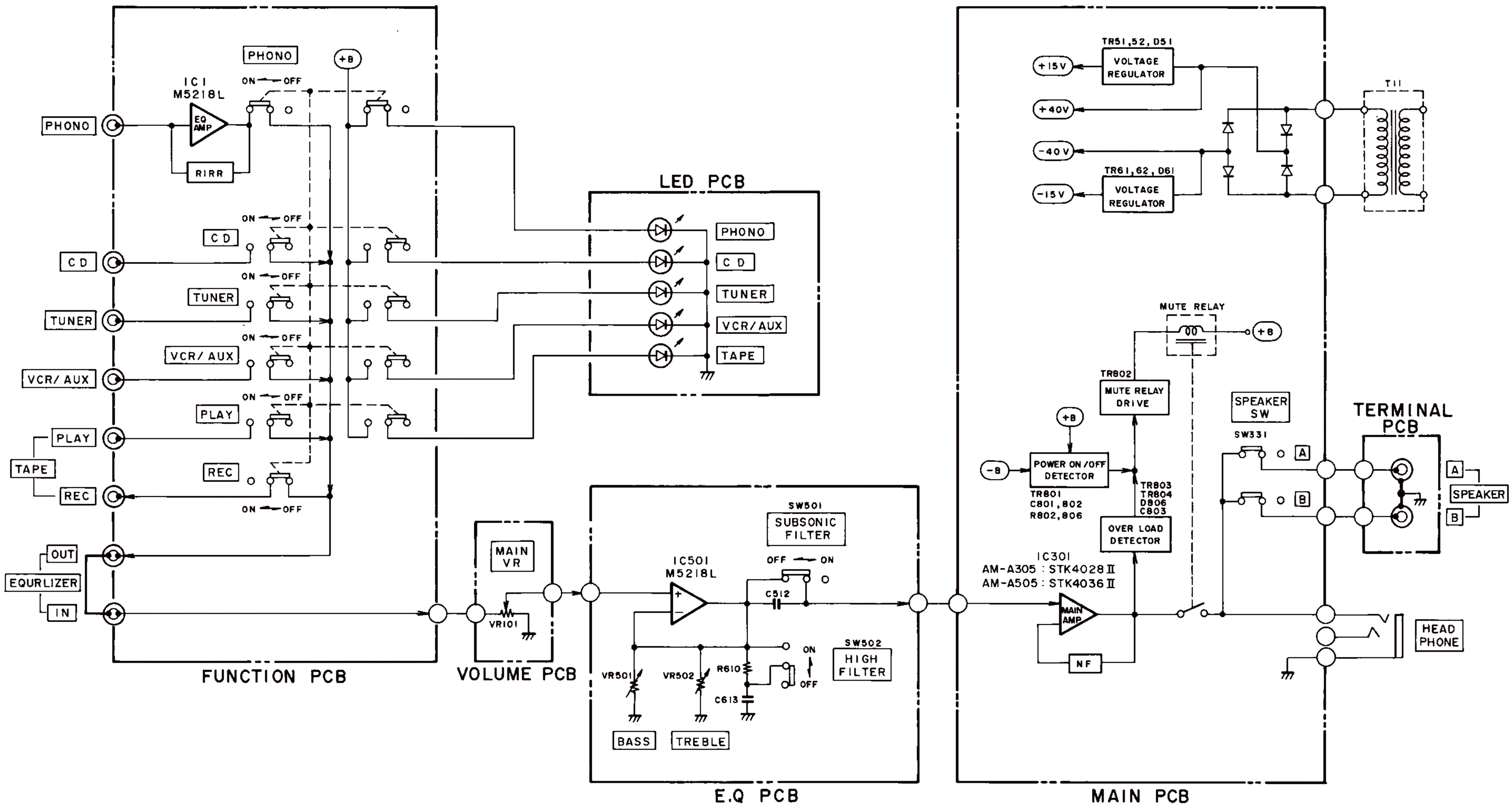

AM-A305/A505
BLOCK DIAGRAM
NO. 870610A